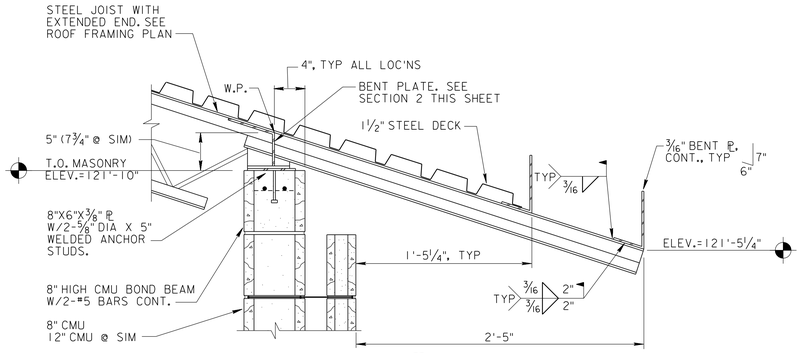

SECTION 1 S2.1 S4.1 S2.2

SCALE: 1 1/2 INCH = 1FOOT

12" 9" 6" 3" 0 1'

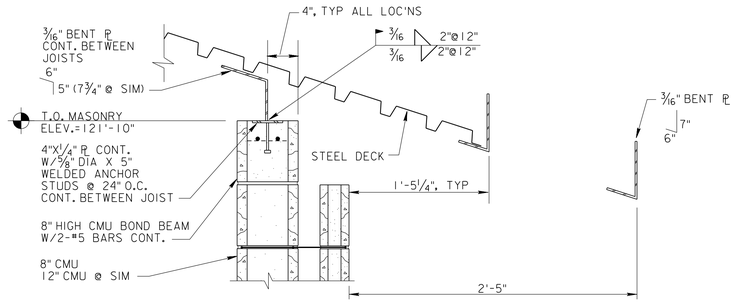

SECTION 2 S2.1 S4.1 S2.2

SCALE: 1 1/2 INCH = 1FOOT

12" 9" 6" 3" 0 1'

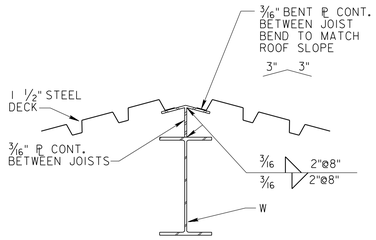

SECTION 3 S2.1 S4.1 S2.2

SCALE: 1 1/2 INCH = 1FOOT

12" 9" 6" 3" 0 1'

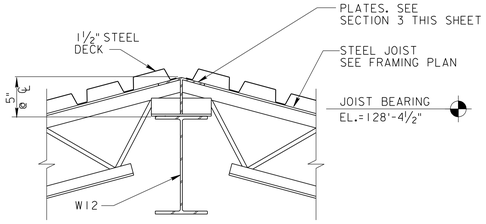

SECTION 4 S2.1 S4.1 S2.2

SCALE: 1 1/2 INCH = 1FOOT

12" 9" 6" 3" 0 1'

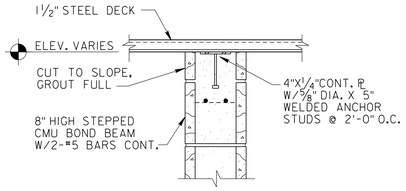

SECTION 5 S2.1 S4.1

SCALE: 1 1/2 INCH = 1FOOT

12" 9" 6" 3" 0 1'

EXAMPLE
35% DESIGN

$$ – THINK VALUE ENGINEERING – $$

Revisions

Symbol	Descriptions	Date	Approved

U.S. ARMY ENGINEER DISTRICT
CORPS OF ENGINEERS
OMAHA, NEBRASKA

Designed by: X.X.X

Drawn by: X.X.X.

Checked by:

Reviewed by:

Submitted by:

Chief: Section

SITE NAME — SITE LOCATION

OMAHA DISTRICT DESIGN GUIDE

ROOF FRAMING DETAILS

Plot Scale Ratio: 1.5:1

Design File: DG30S401.DGN

Date: JUNE 2002

Spec. No.: DACA 45

Contract No.: DACA 45

Drawing Code: X

Sheet reference number: **S4.01**

COMPUTER AIDED DESIGN & DRAFTING

d:\oddg\struct\dg35s401.dgn 05/30/02 02:01:57 PM