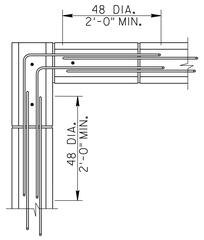

PLAN VIEW OF REINFORCEMENT

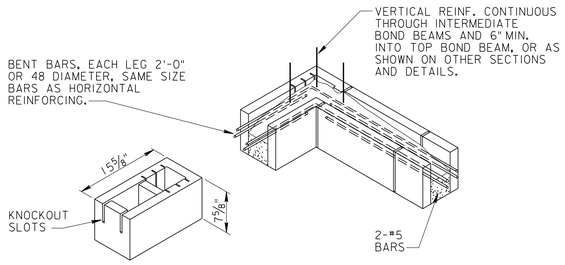

BOND BEAM UNIT AT CORNER
NO SCALE

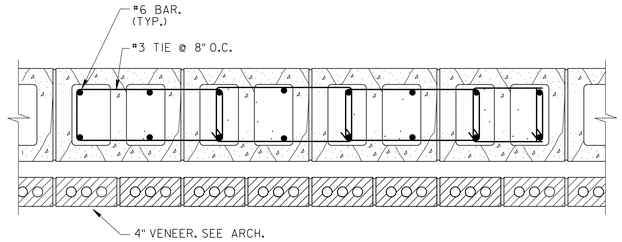

MASONRY PIER P-1
NO SCALE

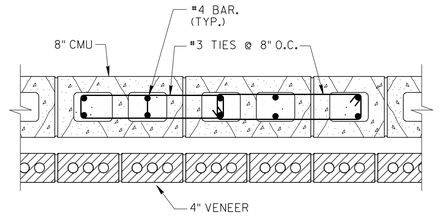

MASONRY PIER P-3
NO SCALE

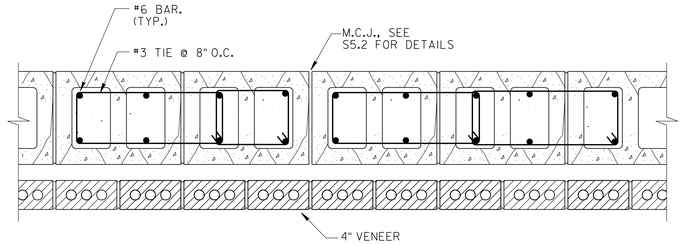

MASONRY PIER P-2
NO SCALE

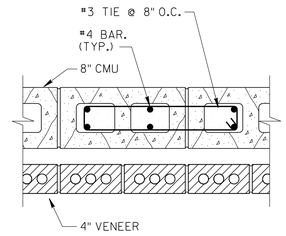

MASONRY PIER P-4
NO SCALE

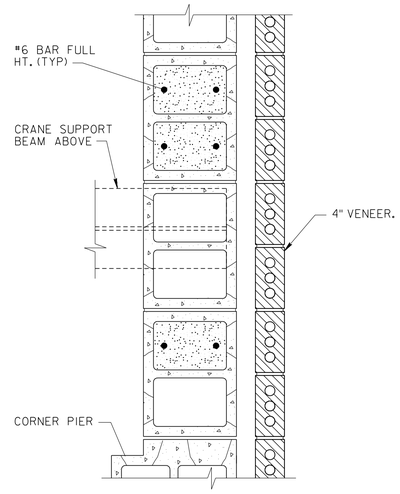

SECTION 1 / S4.3|S5.1
SCALE: 1 1/2 INCH = 1FOOT
12" 9" 6" 3" 0 1'

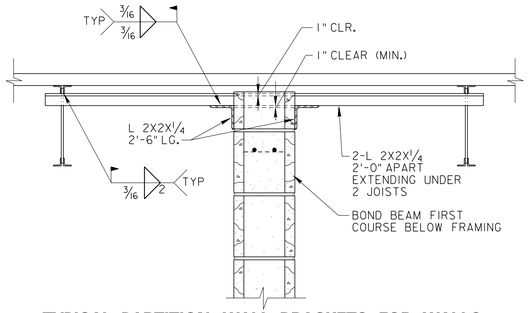

TYPICAL PARTITION WALL BRACKETS FOR WALLS EXTENDING TO DECK ABOVE
NO SCALE

SPACE AT A MAZIMUM OF 8'-0" O.C. USING A MIN. OF TWO PER WALL IN ANYONE DIRECTION.

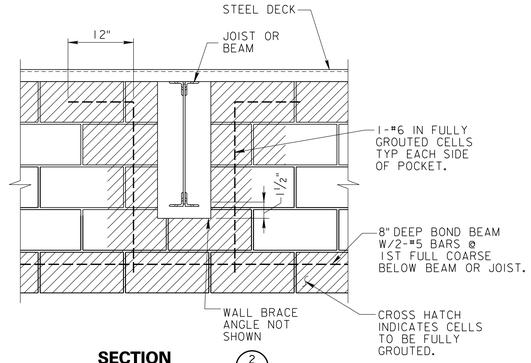

SECTION 2 / S2.1|S5.1
SCALE: 1 INCH = 1FOOT
12" 6" 0 1'

TYPICAL JOIST, BEAM OR TRUSS POCKET IN CMU WALL.

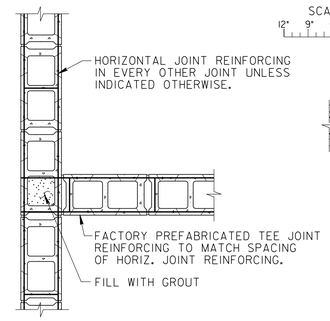

INTERSECTION OF STRUCTURAL WALLS
NO SCALE

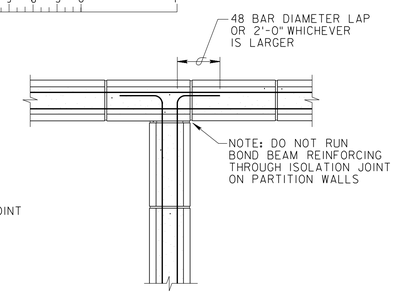

INTERSECTION OF BOND BEAM
NO SCALE

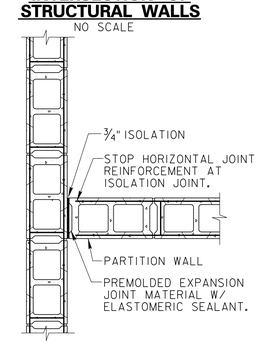

PARTITION WALLS ABUTTING STRUCTURAL WALLS
NO SCALE

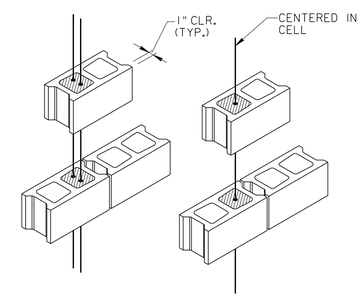

TYPICAL VERTICAL REINFORCING FOR SINGLE AND DOUBLE STIFFNERS
NO SCALE

LINTEL SCHEDULE						
MARK	LINTEL SECTION	WALL OPENING	BEARING ELEVATION	DETAIL	BEARING LENGTH	LOCATION
L-1	8" x 8" CMU LINTEL W/ 2-#5 BARS.	3'-4"	107'-2" 117'-10"@sim	A-SIM	8"	MISC INTERIOR, MEZZ, LOBBY
L-2	8" x 16" CMU LINTEL W/ 2-#5 BARS.	6'-4"	107'-2"	A-SIM	8"	MEZZ.
L-3	8" x 16" CMU LINTEL W/ 2-#5 BARS.	6'-0"	117'-10"	A-SIM	8"	MEZZ/3-BAY
L-4	8" x 16" CMU LINTEL W/ 2-#5 BARS.	4'-0"	114'-6"	A-SIM	8"	MEZZ/MECH ROOM
L-5	12" x 16" CMU LINTEL W/ 2-#5 BARS. L 5 x 5 x 5/16 VENEER SUPPORT	6'-0"	112'-6"	A	8"	END WALL WINDOWS
L-6	8" x 16" CMU LINTEL W/ 2-#5 BARS. L 5 x 5 x 5/16 VENEER SUPPORT	Varies	Top of Louvers coord. w/ mech.	A	8"	MEZZ/EXTERIOR LOUVERS
L-7	8" x 48" CMU LINTEL W/ 2-#6 BARS TOP& BOT. L 5 x 5 x 5/16 VENEER SUPPORT	16'-0"	113'-10"	B	16"	VEHICLE DOORS
L-8	8" x 8" CMU LINTEL W/ 2-#5 BARS. L 5 x 5 x 5/16 VENEER SUPPORT	3'-4"	107'-2"	A	8"	MAINT BAY EXTERIOR DOORS
L-9	8" x 16" CMU LINTEL W/ 2-#5 BARS. L 5 x 5 x 5/16 VENEER SUPPORT	6'-4"	107'-2"	A	8"	MECH ROOM EXT DOOR
L-10	8" x 16" CMU LINTEL W/ 2-#5 BARS. L 5 x 5 x 5/16 VENEER SUPPORT	6'-4"	107'-2"	A	8"	LOW ROOF AREA WINDOWS
L-11	12 x 16" CMU LINTEL W/ 2-#5 BARS. L 5 x 5 x 5/16 VENEER SUPPORT	3'-4"	107'-2"	A	8"	END WALL DOORS
L-12	12" x 16" CMU LINTEL W/ 2-#5 BARS. L 5 x 5 x 5/16 VENEER SUPPORT	6'-0"	107'-2"	A	8"	P.M. BAY (RM 101) ROLL-UP DOOR

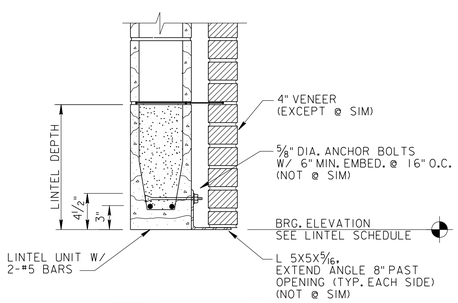

DETAIL A
SCALE: 1 1/2 INCH = 1FOOT
12" 9" 6" 3" 0 1'

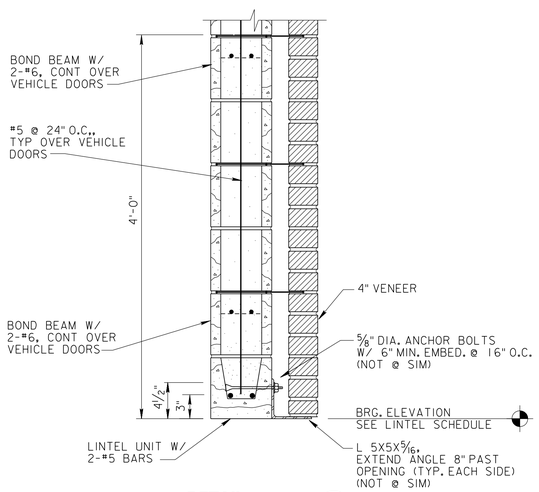

DETAIL B
SCALE: 1 1/2 INCH = 1FOOT
12" 9" 6" 3" 0 1'

EXAMPLE 100% DESIGN

COMPUTER AIDED DESIGN & DRAFTING

$$ – THINK VALUE ENGINEERING – $$

Revisions

Symbol	Descriptions	Date	Approved

U.S. ARMY ENGINEER DISTRICT
CORPS OF ENGINEERS
OMAHA, NEBRASKA

Designed by: X.X.X
Drawn by: X.X.X.
Checked by: X.X.X.
Reviewed by: X.X.X.
Submitted by:
Chief: Section

SITE NAME — SITE LOCATION
OMAHA DISTRICT DESIGN GUIDE

CMU DETAILS

Plot Scale Ratio: 1.5:1
Design File: DG10S501.DGN
Date: JUNE 2002
Spec. No.: DACA 45
Contract No.: DACA 45
Drawing Code: X
Sheet reference number: **S5.01**

d:\oddg\struct\dg10s501.dgn 05/30/02 01:12:28 PM