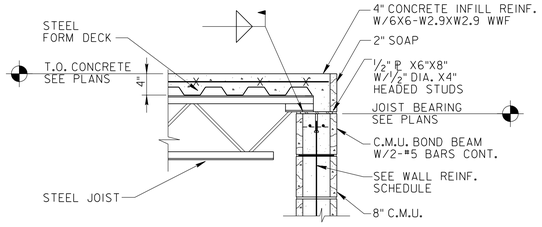

SECTION 1 S2.1|S4.3

SCALE: 1 INCH = 1FOOT

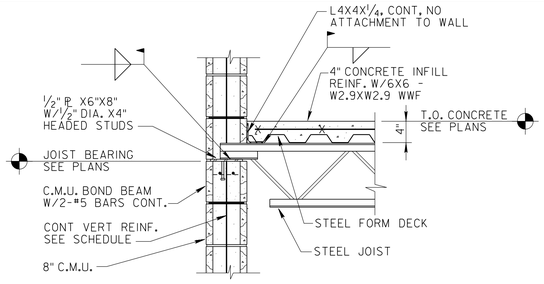

SECTION 2 S2.1|S4.3

SCALE: 1 INCH = 1FOOT

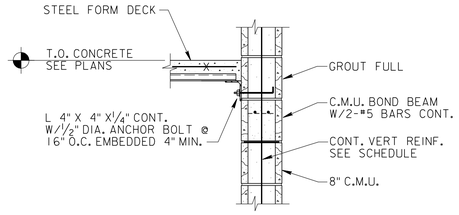

SECTION 3 S2.1|S4.3

SCALE: 1 INCH = 1FOOT

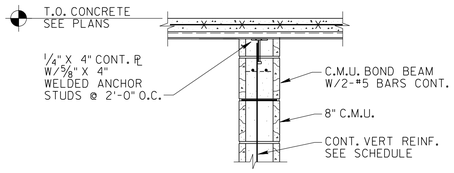

SECTION 4 S2.1|S4.3

SCALE: 1 INCH = 1FOOT

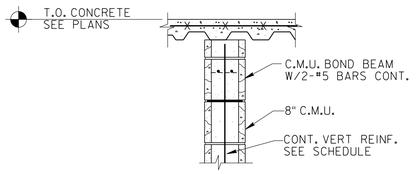

SECTION 5 S2.1|S4.3

SCALE: 1 INCH = 1FOOT

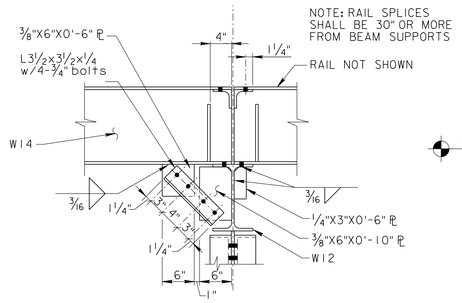

SECTION 6 S4.3|S4.3

SCALE: 1 INCH = 1FOOT

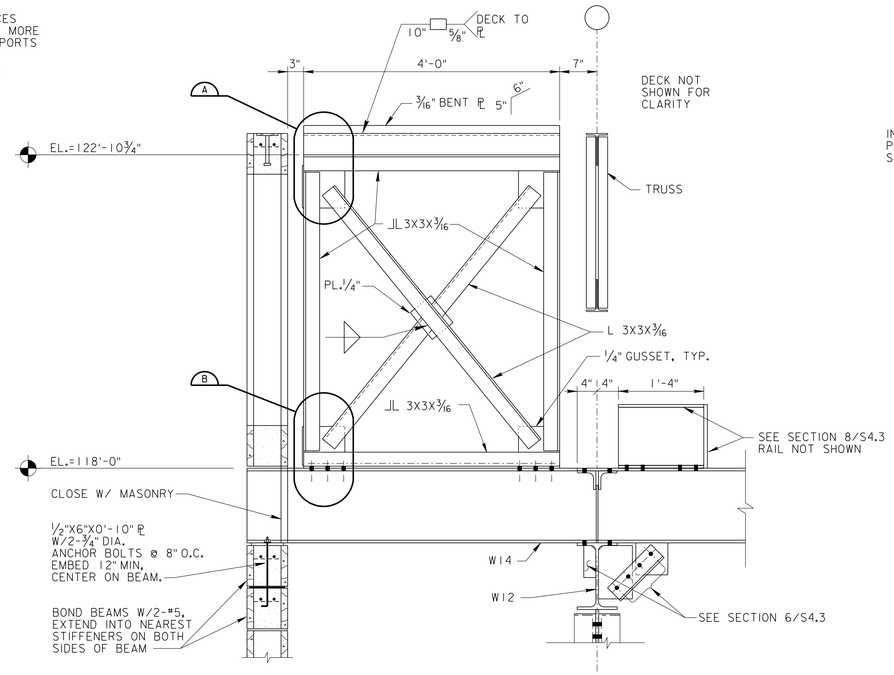

SECTION 7 S2.2|S4.3

SCALE: 1 INCH = 1FOOT

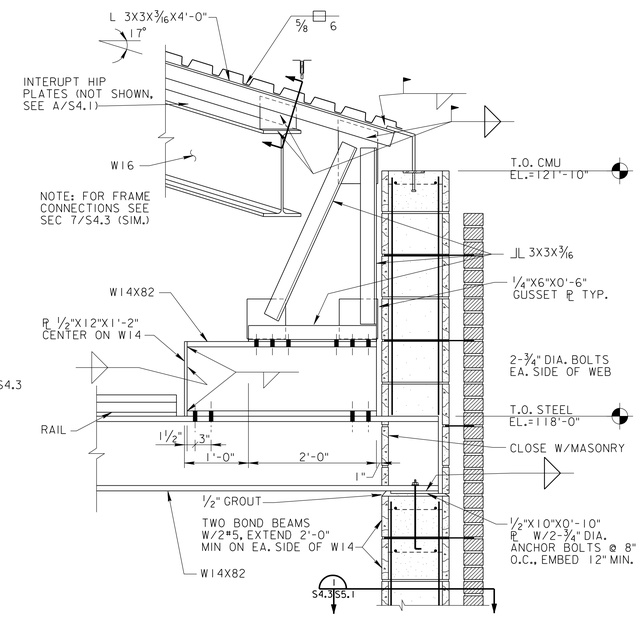

SECTION 8 S2.2|S4.3

SCALE: 1 INCH = 1FOOT

EXAMPLE 100% DESIGN

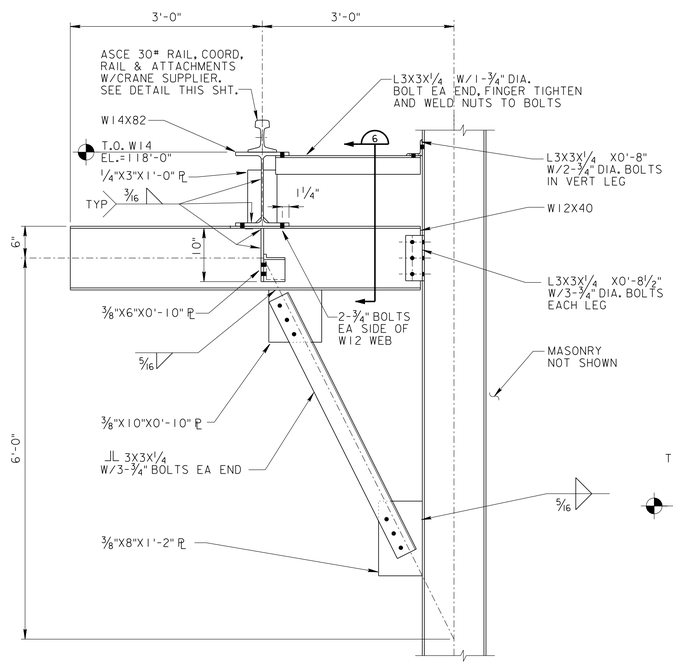

SECTION 9 S2.2|S4.3

SCALE: 1 INCH = 1FOOT

NOTE:
COORDINATE RAIL SUPPORT BEAM LOCATION AND ATTACHMENT W/CRANE SUPPLIER

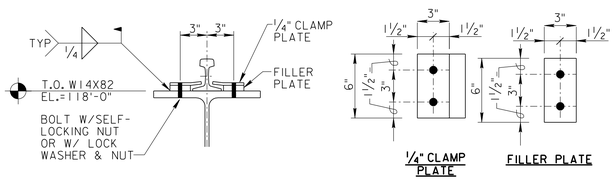

TYPICAL CRANE RAIL ATTACHMENT

NO SCALE

NOTES: 1. PLACE ATTACHMENTS @ 3'-0" O.C. MAX.

2. COORD. W/ CRANE SUPPLIER, IF HEAVIER RAIL OR DIFFERENT ATTACHMENT IS REQUIRED, IT SHALL BE PROVIDED AT NO ADDITIONAL COST TO THE GOVERNMENT.

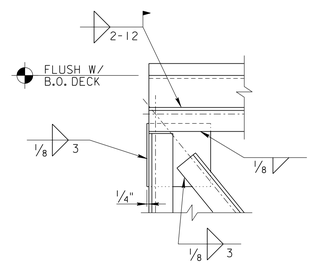

DETAIL A

SCALE: 1 1/2 INCH = 1FOOT

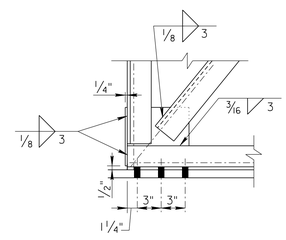

DETAIL B

SCALE. 3 INCHES = 1FOOT

$$ – THINK VALUE ENGINEERING – $$

Revisions

Symbol	Descriptions	Date	Approved

U.S. ARMY ENGINEER DISTRICT
CORPS OF ENGINEERS
OMAHA, NEBRASKA

Designed by: X.X.X
Drawn by: X.X.X.
Checked by: X.X.X.
Reviewed by: X.X.X.
Submitted by: Chief: Section

SITE NAME: OMAHA DISTRICT DESIGN GUIDE
SITE LOCATION

FRAMING DETAILS

Plot Scale Ratio: 1:1
Design File: DG10S403.DGN
Date: JUNE 2002
Spec. No.: DACA 45
Contract No.: DACA 45
Drawing Code: X
Sheet reference number: S4.03

COMPUTER AIDED DESIGN & DRAFTING

d:\oddg\structl\dg10s403.dgn 05/30/02 01:08:15 PM