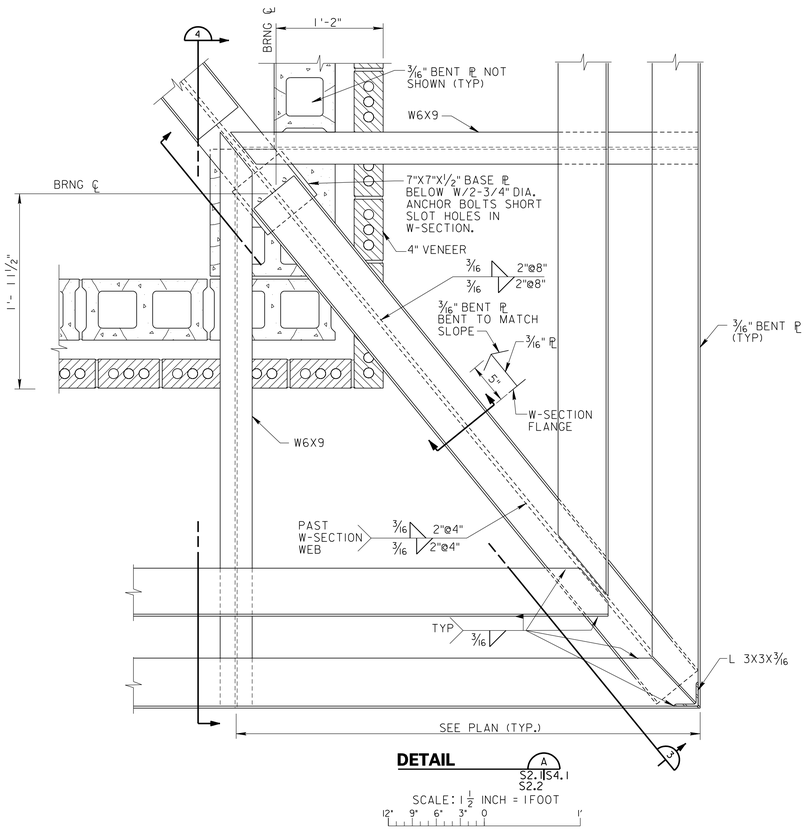

DETAIL A S2.1\S4.1 S2.2

SCALE: 1 1/2 INCH = 1FOOT

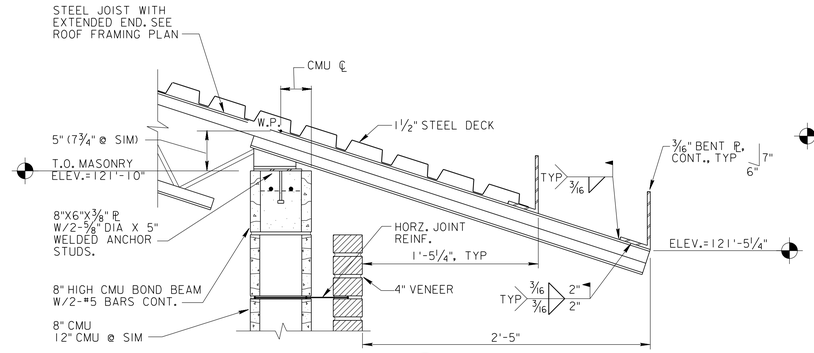

SECTION 1 S2.1\S4.1 S2.2

SCALE: 1 1/2 INCH = 1FOOT

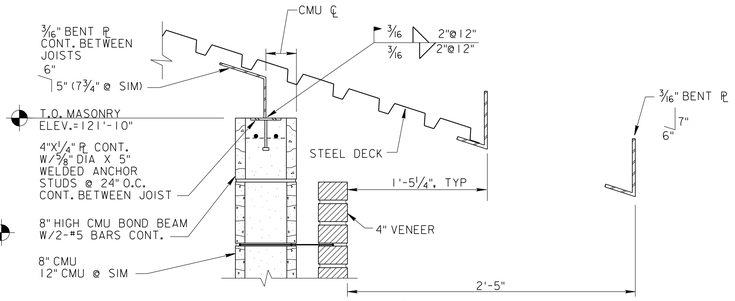

SECTION 2 S2.1\S4.1 S2.2

SCALE: 1 1/2 INCH = 1FOOT

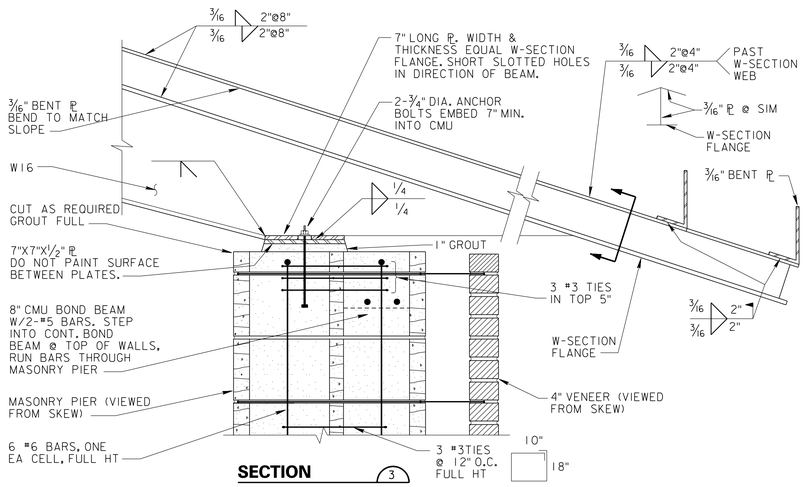

SECTION 3

SCALE: 1 1/2 INCH = 1FOOT

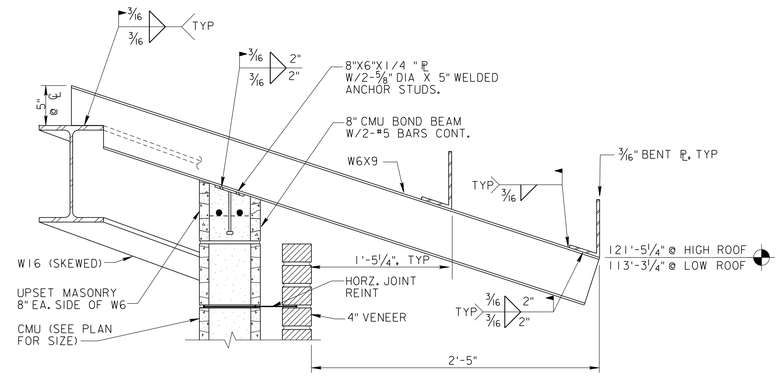

SECTION 4

SCALE: 1 1/2 INCH = 1FOOT

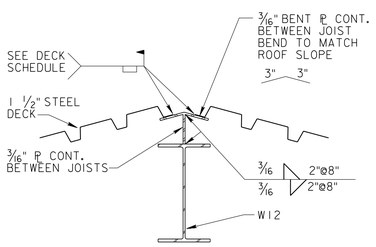

SECTION 5 S2.1\S4.1 S2.2

SCALE: 1 1/2 INCH = 1FOOT

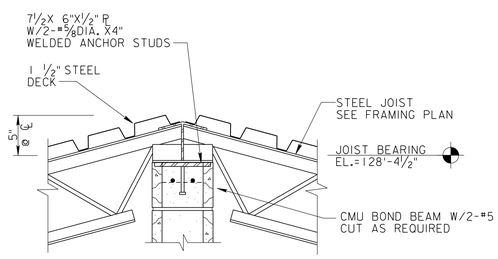

SECTION 6 S2.1\S4.1

SCALE: 1 1/2 INCH = 1FOOT

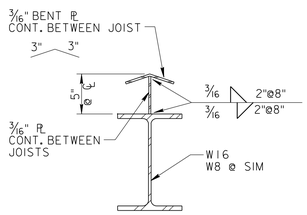

SECTION 7 S2.1\S4.1 S2.2

SCALE: 1 1/2 INCH = 1FOOT

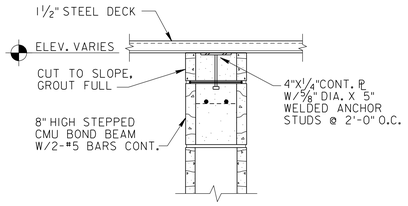

SECTION 8 S2.1\S4.1 S4.2

SCALE: 1 1/2 INCH = 1FOOT

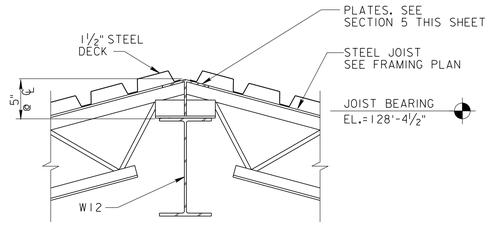

SECTION 9 S2.1\S4.1 S2.2

SCALE: 1 1/2 INCH = 1FOOT

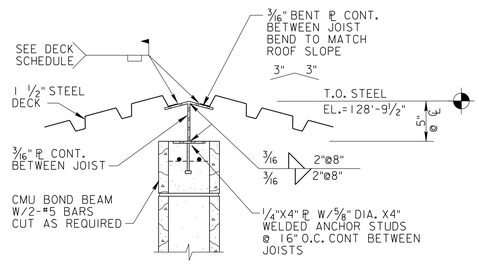

SECTION 10 S2.1\S4.1

SCALE: 1 1/2 INCH = 1FOOT

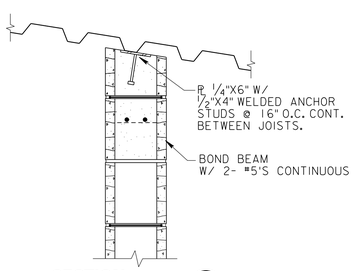

SECTION 11 S2.1\S4.1

SCALE: 1 1/2 INCH = 1FOOT

EXAMPLE 100% DESIGN

$$ – THINK VALUE ENGINEERING – $$

Revisions

Symbol	Descriptions	Date	Approved

U.S. ARMY ENGINEER DISTRICT
CORPS OF ENGINEERS
OMAHA, NEBRASKA

Designed by: X.X.X
Drawn by: X.X.X.
Checked by: X.X.X.
Reviewed by: X.X.X.
Submitted by: Chief: Section

SITE NAME: OMAHA DISTRICT DESIGN GUIDE
SITE LOCATION

ROOF FRAMING DETAILS

Plot Scale Ratio: 1.5:1
Design File: DG10S401.DGN
Date: JUNE 2002
Spec. No.: DACA 45
Contract No.: DACA 45
Drawing Code: X
Sheet reference number: S4.01

COMPUTER AIDED DESIGN & DRAFTING

d:\oddg\struct\dg10s401.dgn 05/30/02 12:58:46 PM