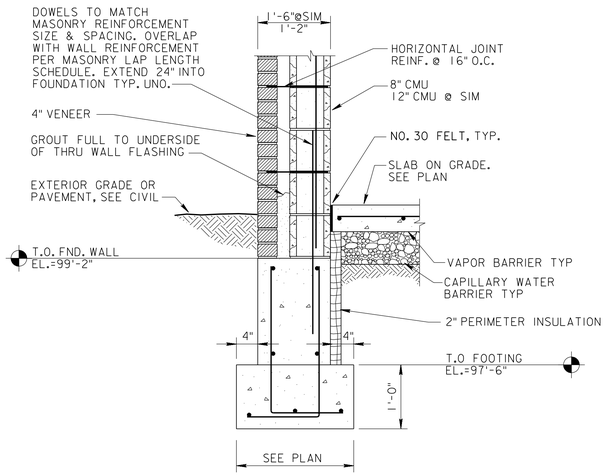

SECTION 1 S1.1, S1.2 S3.1

SCALE: 1 INCH = 1FOOT

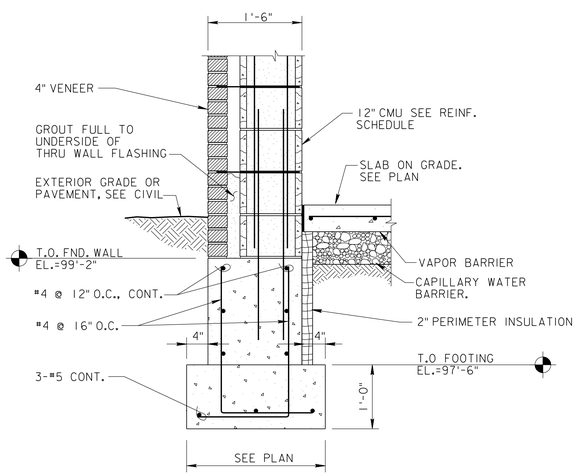

SECTION 2 S1.1, S1.2 S3.1

SCALE: 1 INCH = 1FOOT

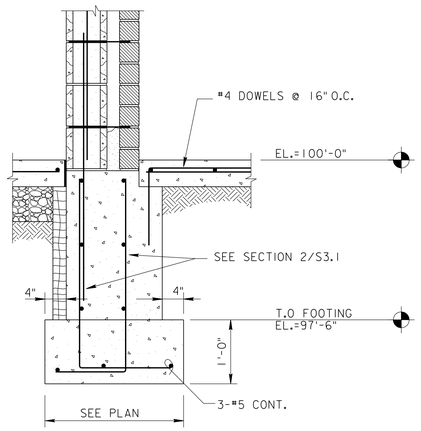

SECTION 3 S1.1, S1.2 S3.1

SCALE: 1 INCH = 1FOOT

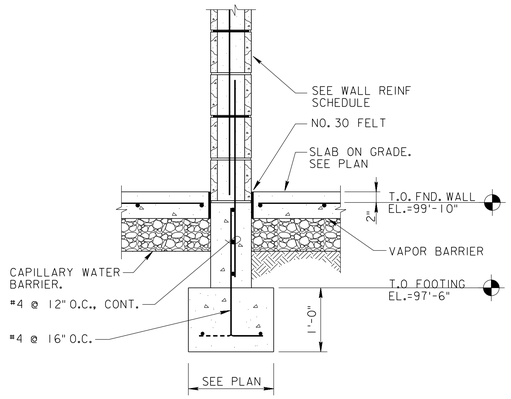

SECTION 4 S1.1 S3.1

SCALE: 1 INCH = 1FOOT

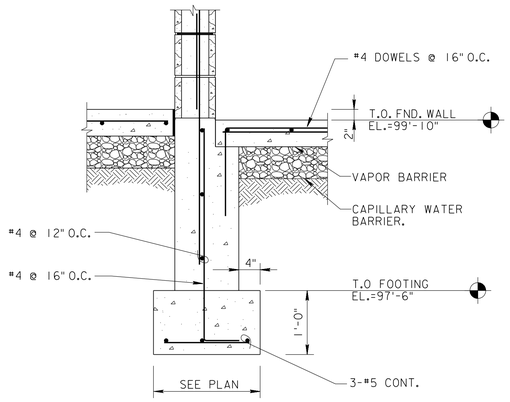

SECTION 5 S1.1 S3.1

SCALE: 1 INCH = 1FOOT

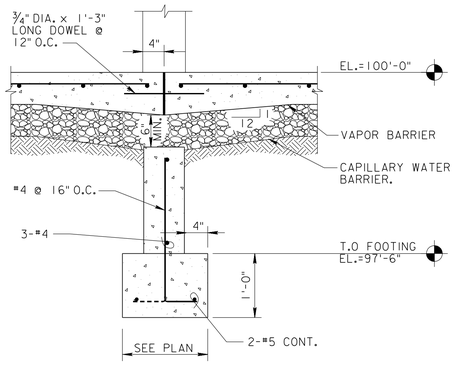

SECTION 6 S1.1 S3.1

SCALE: 1 INCH = 1FOOT

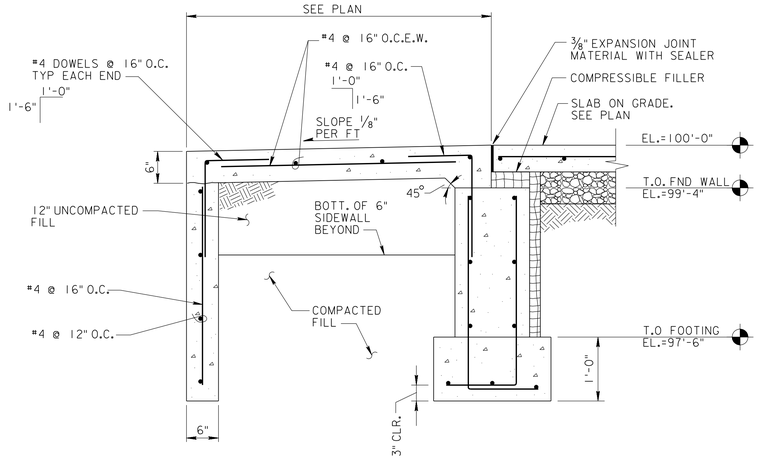

SECTION 7 S1.1, S1.2 S3.1

SCALE: 1 INCH = 1FOOT

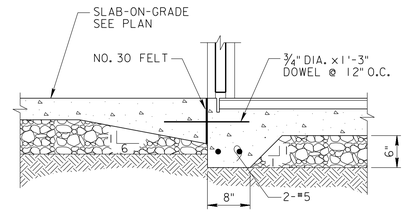

SECTION 8 S1.1 S3.1

SCALE: 1 INCH = 1FOOT

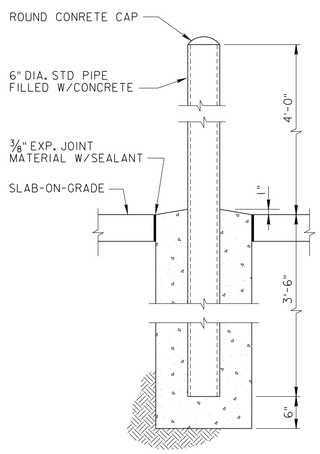

SECTION 9 S1.1 S3.1

SCALE: 1 INCH = 1FOOT

EXAMPLE 100% DESIGN

$$ – THINK VALUE ENGINEERING – $$

Revisions

Symbol	Descriptions	Date	Approved

U.S. ARMY ENGINEER DISTRICT
CORPS OF ENGINEERS
OMAHA, NEBRASKA

Designed by: X.X.X
Drawn by: X.X.X.
Checked by: X.X.X.
Reviewed by: X.X.X.
Submitted by:
Chief: Section

SITE NAME — SITE LOCATION

OMAHA DISTRICT DESIGN GUIDE

FOUNDATION DETAILS

Plot Scale Ratio: 1:1
Design File: DG10S301.DGN
Date: JUNE 2002
Spec. No.: DACA 45
Contract No.: DACA 45
Drawing Code: X
Sheet reference number: **S3.01**

COMPUTER AIDED DESIGN & DRAFTING