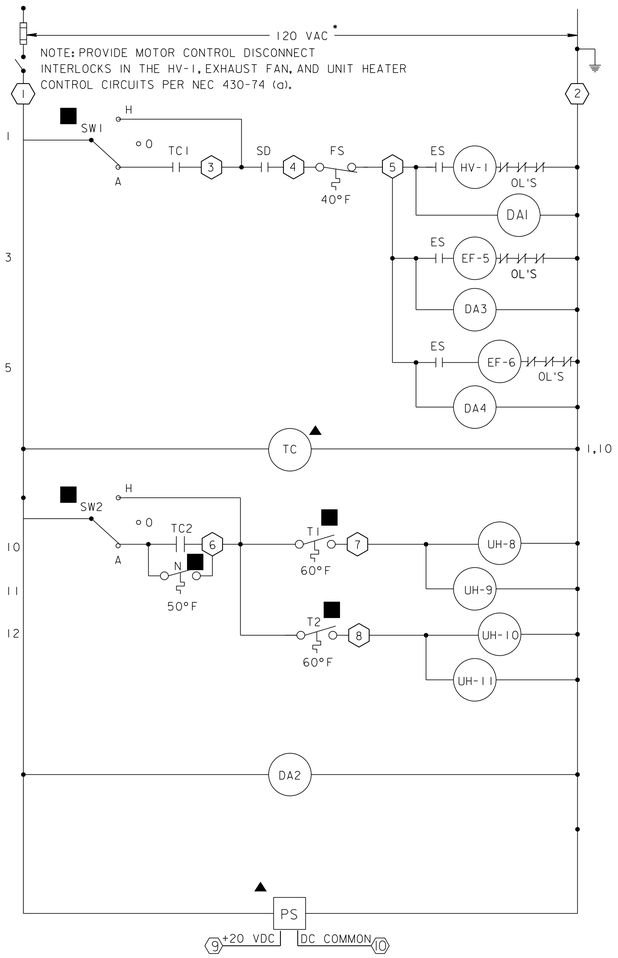

• SEE ELECTRICAL POWER PLANS FOR SOURCE OF CONTROL PANEL (TCP-2) POWER.

ELEMENTARY DIAGRAM

EXPLOSION-PROOF REQM'TS: ALL CONTROLS LOCATED WITHIN HAZARDOUS AREAS SHALL BE SUITABLE FOR USE IN A CLASS 1, DIVISION 1, GROUP D AREA. SEE SHT. E-10 FOR LOCATION OF HAZARDOUS AREAS.

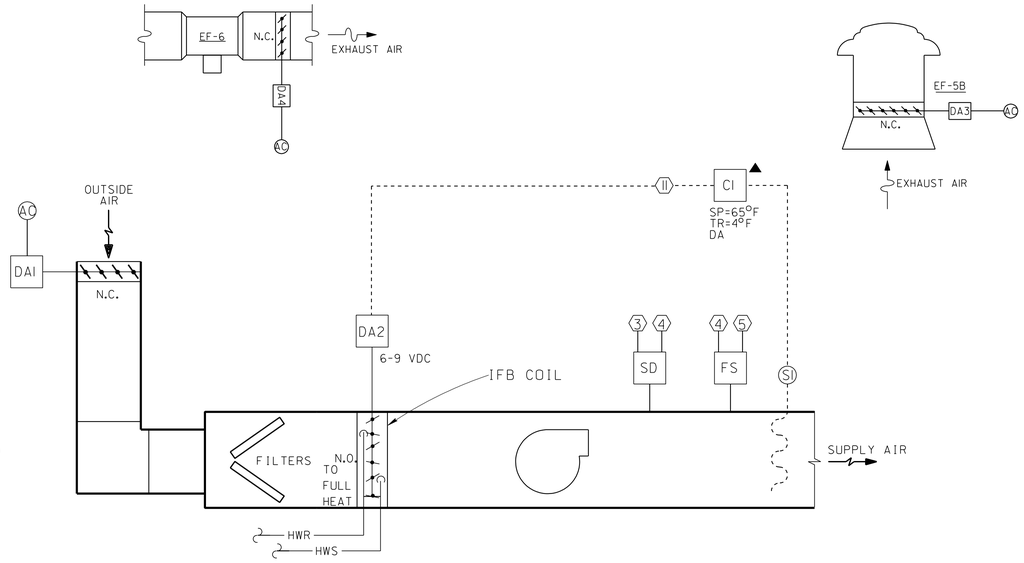

HV-1 CONTROL SCHEMATIC

SEQUENCE OF CONTROL

GENERAL: THE SYSTEM CONSISTS OF A ROOF-MOUNTED EXHAUST FAN (EF-5) AND AN IN-LINE EXHAST FAN (EF-6) INTERLOCKED WITH HORIZONTAL HEATING AND VENTILATING UNIT (HV-1). THE HV UNIT IS A 100 PERCENT OUTSIDE AIR UNIT EQUIPPED WITH FILTER SECTION, INTEGRAL FACE & BYPASS HEATING COIL, AND FAN SECTION. IN ADDITON: A SET OF FOUR VERTICAL UNIT HEATERS (UH-8 THRU 11) ARE PROVIDED.

TIMED CONTROLS: THE SYSTEM INCLUDES A SEVEN DAY TIMECLOCK (TC) WHICH SHALL PLACE THE SYSTEM IN THE OCCUPIED OR UNOCCUPIED MODE.

SAFETY CONTROLS:

MANUAL RESET FREEZESTSAT (FS) SHALL INTERUPT POWER TO THE SUPPLY AND EXHAUST FANS AND CLOSE THEIR ASSOCIATED DAMPERS AT HV UNIT LEAVING TEMPERATURES BELOW 35° F (ADJUSTABLE).

SMOKE DETECTOR (SD) SHALL, ON DETECTION OF SMOKE, STOP THE SUPPLY AND EXHAUST FANS AND CLOSE THEIR ASSOCIATED DAMPERS. IN ADDITION: AN ALARM SHALL BE SENT TO THE BUILDING FIRE ALARM PANEL.

HV-1 CONTROLS:

SUPPLY FAN CONTROL. WITH ALL SAFETY CONTROLS CLOSED AND WITH THE HAND-OFF-AUTO SWITCH IN THE "AUTO" POSITION, THE SUPPLY FAN SHALL BE CONTROLLED BY THE TIMECLOCK. OUTSIDE-AIR DAMPER END SWITCH (ES) CONTACTS MUST BE MADE BEFORE THE SUPPLY FAN CAN BE ENERGIZED.

SUPPLY AIR TEMPERATURE CONTROL. SUPPLY DUCT SENSOR (S1), THRU CONTROLLER (C1), SHALL MODULATE THE INTEGRAL FACE AND BYPASS COIL DAMPERS TO MAINTAIN A DISCHARGE TEMPERATURE OF 65° F (ADJUSTABLE).

EXHAUST FAN CONTROLS: THE EXHAUST FANS AND ASSOCIATED EXHAUST DAMPERS SHALL BE INTERLOCKED WITH THE HV UNIT SUPPLY FAN TO RUN WHEN THE SUPPLY FAN IS OPERATING. EXHAUST FANS RESPECTIVE DAMPER END SWITCH (ES) CONTACTS MUST BE MADE BEFORE THE EXHAUST FAN CAN BE ENERGIZED.

UNIT HEATER CONTROLS:

OCCUPIED MODE. DURING THE OCCUPIED MODE, THRU TIMECLOCK CONTACTS (TC2), AND WITH THE HAND-OFF-AUTO SWITCH IN THE "AUTO" POSITION, SPACE THERMOSTAT (T1) SHALL CYCLE UNIT HEATER (UH-8 & 9) FANS ON AND SPACE THERMOSTAT (T2) SHALL CYCLE UNIT HEATER (UH-10 & 11) FANS ON TO MAINTAIN A SPACE TEMPERATURE OF 60° F (ADJUSTABLE).

UNOCCUPIED MODE. DURING THE UNOCCUPIED MODE, NIGHT THERMOSTAT (N) SHALL CYCLE ALL UNIT HEATER (UH-8,9,10 & 11) FANS TO MAINTAIN A SPACE SETBACK TEMPERATURE OF 50° F (ADJUSTABLE).

DESCRIPTION OF COMPONENTS

C1 AN ELECTRONIC, PROPORTIONAL, SINGLE INPUT TEMPERATURE CONTROLLER WITH A THROTTLING RANGE OF 4 DEGREES F (FIXED OR ADJUSTABLE) AND DIRECT ACTION.

DA1 AN ELECTRIC (120 VAC), TWO POSITION, SPRING RETURN DAMPER ACTUATOR.

DA2 AN ELECTRONIC DAMPER ACTUATOR, SPRING RETURN WITH A PROPORTIONAL DRIVE COMPATIBLE WITH ASSOCIATED CONTROLLERS. OPERATING RAGE SHALL BE 6-9 VDC.

DA3 SAME AS DA1.

DA4 SAME AS DA1.

FS A MANUAL RESET, TEMPERATURE SENSITIVE SPST SWITCH WITH A REMOTE BULB. 120 VAC.

PS A REGULATED DC VOLTAGE POWER SUPPLY COMPATIBLE WITH ALL COMPONENTS REQUIRING DC VOLTAGE.

S1 REMOTE, ELECTRONIC, AVERAGING DUCT TEMPERATURE SENSOR COMPATIBLE WITH ASSOCIATED CONTROLLER.

SD SMOKE DETECTOR, SEE ELECTRICAL SPECIFICATIONS FOR REQUIREMENTS.

SW1 AN EXPLOSION-PROOF, HAND-OFF-AUTO MANUAL SELECTOR SWITCH. 120 VAC

SW2 SAME AS SW1

TC A SEVEN DAY TIMECLOCK WITH A MINIMUM OF SEVEN "ON" AND SEVEN "OFF" SWITCH TRIPPERS (FULLY ADJUSTABLE). THE MINIMUM OUTPUT IS TWO SPDT RELAYS. THE TIMECLOCK SHALL HAVE AN 8 HOUR SPRING BACKUP OR CONTINUOUSLY CHARGE BATTERY BACKUP.

ES DAMPER END SWITCH (TYP.)

N AN ELECTRIC, TWO POSITION NIGHT THERMOSTAT WITH A DIFFERENTIAL OF 4°F (FIXED OR ADJUSTABLE). SETPOINT SHALL BE ADJUSTABLE 45-60F MINIMUM. THERMOSTAT SHALL SHALL HAVE TWO SETS OF CONTACTS THAT CLOSE UPON A DROP IN TEMPERATURE BELOW SETPOINT.

T1 AN ELECTRIC EXPLOSION-PROOF, TWO POSITION SPACE THERMOSTAT WITH A DIFFERENTIAL OF 4°F (FIXED OR ADJUSTABLE). SETPOINT SHALL BE ADJUSTABLE 50-65F MINIMUM. THERMOSTAT SHALL SHALL HAVE CONTACTS THAT CLOSE UPON A DROP IN TEMPERATURE BELOW SETPOINT.

T2 SAME AS T1.

HVAC CONTROLS SYSTEM

This HVAC control system was designed using Barber-Coleman controls as a reference. Other manufacturer's controls are permitted as long as the strategies and accuracy of control are not changed. The drawings shown are used to define the required drawing detail of the Temp. Control Submittals. Actual terminal numbering, control components, and control setpoints shall be documented on Contractor submittals as required by the Specification SECTION 15895.

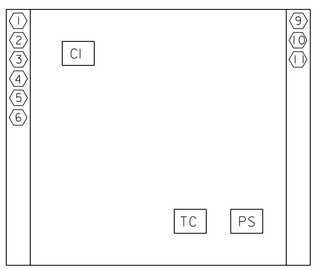

UNIT CONTROL PANEL DETAIL

NO SCALE

NOTES:

1. INSTALL COMPONENTS IN THE LOCATIONS INDICATED.
2. CONTROL PANEL SHALL BE SECURELY MOUNTED ON WALL WHERE SHOWN.
3. USE A CONSISTENT COLOR CODED WIRING SCHEME.
4. LABEL ALL WIRING ENTERING OR LEAVING THE CONTROL PANEL.
5. CONNECTIONS TO THE ELECTRICAL TERMINAL STRIP SHALL BE IN ACCORDANCE WITH THE CONTROL SCHEMATIC AND ELEMENTARY DIAGRAM.
6. LINE VOLTAGE TEST POINTS AND DC VOLTAGE TEST POINTS SHALL BE ON OPPOSITE SIDES OF THE PANEL.

SYSTEM OPERATING SCHEDULE

SPACE TEMP	Vout C1	F&B DMPR POS
51	-	FULL FLOW THRU COIL
53	1.50	FULL FLOW THRU COIL
55	2.25	FULL FLOW THRU COIL
57	3.00	FULL FLOW THRU COIL
59	3.75	FULL FLOW THRU COIL
61	4.50	FULL FLOW THRU COIL
63	6.00	FULL FLOW THRU COIL
65	7.50	50% FLOW
67	9.00	FULL BY-PASS
69	10.50	↓
71	12.75	↓

LEGEND

SP	SETPOINT
TR	THROTTLING RANGE
NC	NORMALLY CLOSED
NO	NORMALLY OPEN
C	COMMON
DA	DIRECT ACTION
RA	REVERSE ACTING
▲	MOUNT IN UNIT CONTROL PANEL
■	MOUNT IN SPACE
⬡	ELECTRICAL TERMINAL POINT

EXAMPLE
FINAL DESIGN
PROJECT DIRECTORY: DG100

$$ – THINK VALUE ENGINEERING – $$

Revisions

Symbol	Descriptions	Date	Approved

U.S. ARMY ENGINEER DISTRICT
CORPS OF ENGINEERS
OMAHA, NEBRASKA

Designed by: R.R.T.
Drawn by: S.L.M.
Checked by: G.D.R.
Reviewed by: K.A.H.
Submitted by:
Chief: MECH. FAC. Section

SITE NAME: OMAHA DISTRICT DESIGN GUIDE
SITE LOCATION

HVAC CONTROLS (2-BAY SYSTEM)

Plot Scale Ratio: 1:12
Design File: STD07: oddgm603.dgn
Date: JUNE 2002
Spec. No.: DACA 45
Contract No.: DACA 45
Drawing Code: X
Sheet reference number: M6.3

COMPUTER AIDED DESIGN & DRAFTING

d:\oddg\mech\oddgm603.dgn 05/30/02 10:07:20 AM