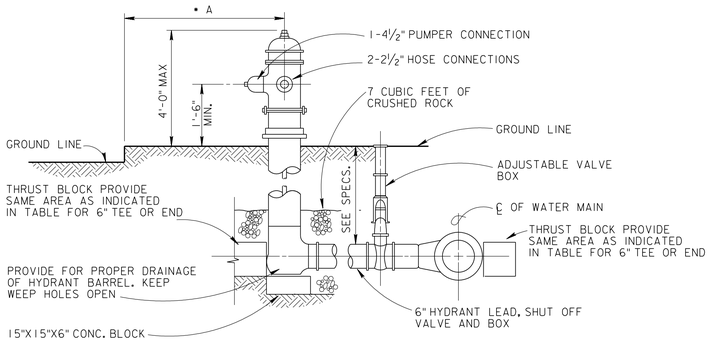

TYPICAL FIRE HYDRANT SETTING

NO SCALE

* A=7'-0" FROM BACK OF PAVEMENT WHERE NO CURB EXISTS OR 4'-0" FROM BACK OF CURB.

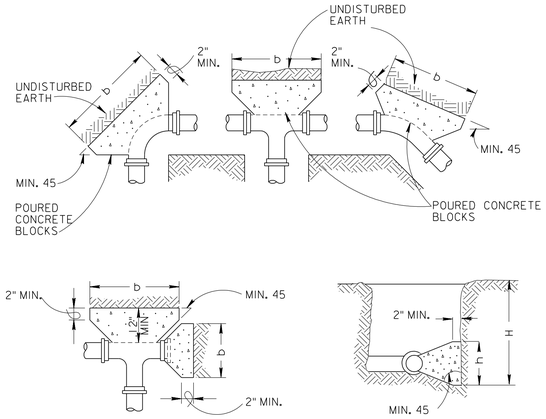

TYPICAL THRUST BLOCKING DETAIL

NO SCALE

NOTES:

1. PLACE 4 ML. POLYETHYLENE BETWEEN CONCRETE AND FITTING (CONCRETE SHALL NOT INTERFERE WITH JOINT.)
2. MINIMUM CONCRETE THICKNESS SHALL BE 12 INCHES.
3. THE HORIZONTAL DIMENSION (b) OF THE BEARING AREA SHALL BE BETWEEN 1.0 AND 2.0 TIMES THE VERTICAL DIMENSION (h). (h <= b <= 2h)
4. THE VERTICAL DIMENSION (h) OF THE BEARING AREA SHALL BE EQUAL TO ONE-HALF THE TOTAL DEPTH (H) TO THE BOTTOM OF THE THRUST BLOCK BUT NOT LESS THAN THE OUTSIDE DIAMETER (DO) OF THE FITTING (DO < h <= H/2).
5. THRUST BLOCK ORIENTATION SHALL BE SUCH THAT THE CENTER OF THE FITTING CORRESPONDS WITH THE CENTER OF THE THRUST BLOCK.
6. THE MINIMUM ALLOWABLE ANGLE (EITHER VERTICAL OR HORIZONTAL) SHALL BE 45 DEGREES.

BEARING AREA OF BLOCK IN SQ. FT. (b X h)					
FITTING SIZES	TEE & END	90° BEND	45° BEND	22½° BEND	11¼° BEND

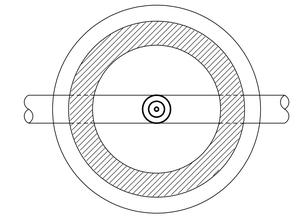

PLAN

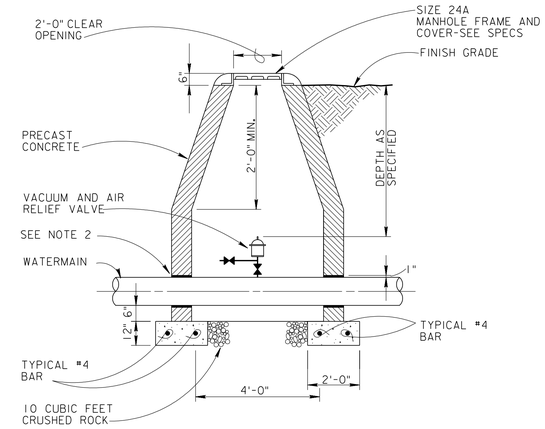

TYPICAL VACUUM AND AIR RELIEF VALVE MANHOLE

NO SCALE

NOTES:

1. PROVIDE SUITABLE SUPPORT TO RELIEVE STRESS ON PIPE AND FITTINGS.
2. CAULK WITH 1" PREMOLDED EXPANSION JOINT MATERIAL.
3. PROVIDE NON-RIGID JOINT A DISTANCE FROM 1 TO 2 FEET ON EACH SIDE OF THE MANHOLE.
4. A FLAT TOP MANHOLE MAY BE USED.

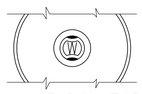

VALVE BOX TOP

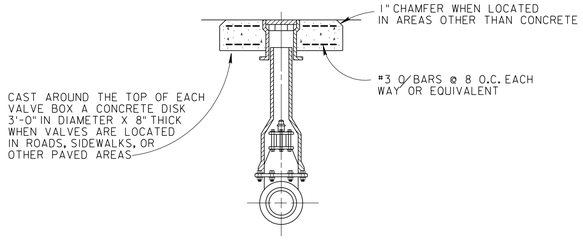

DETAIL VALVE BOX

NO SCALE

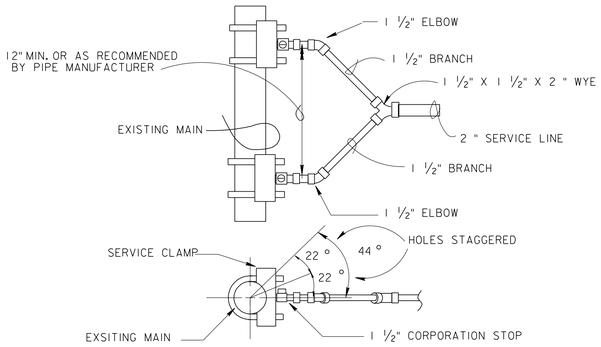

TYPICAL SERVICE CONNECTION

NO SCALE

NOTE: WHERE CONNECTIONS ARE MADE BETWEEN FERROUS & COPPER PIPE, A DIELECTRIC UNION SHALL BE PROVIDED.

NOTE: THE NUMBER OF TAPS REQUIRED AND THE MAXIMUM SIZE OF CORPORATION STOPS AND OUTLETS SHALL BE INCLUDED IN THE SPECIFICATIONS.

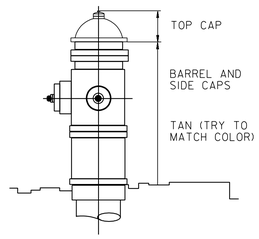

TOP CAP COLORS

1. LESS THAN 500 GPM-BURNT (22263* OR 22144*)
2. 500-900 GPM- DARK BROWN (30108* OR 20040*)
3. 1000-1499 GPM-TAN (SAME AS BARREL) (23690* OR 23617*)
4. 1500 GPM OR GREATER-HARVEST GOLD 30257*

APPROVED SAC FIRE HYDRANT COLOR

NO SCALE

NOTES

1. *FEDERAL STANDARD (COLORS) NO. 595A & CHANGES 1, 2, 3, 4, 5, 6, 7, AND ERRATA, 8,9.
2. BARRELS MUST BE REFLECTIVE

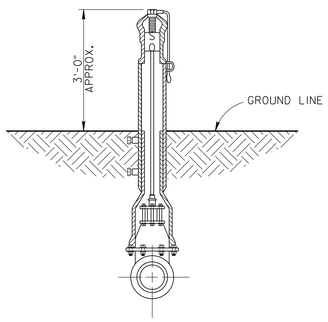

POST INDICATOR VALVE

NO SCALE

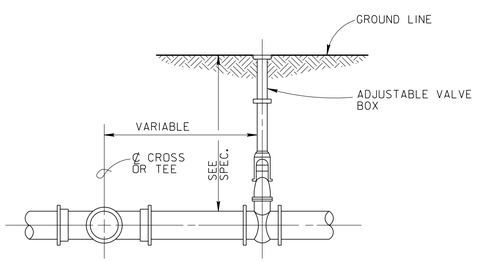

TYPICAL VALVE SETTING

NO SCALE

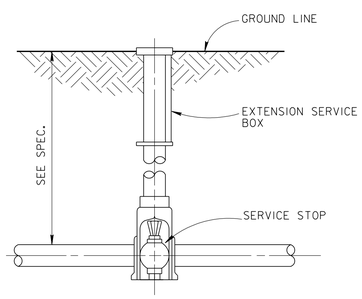

TYPICAL SERVICE BOX SETTING

NO SCALE

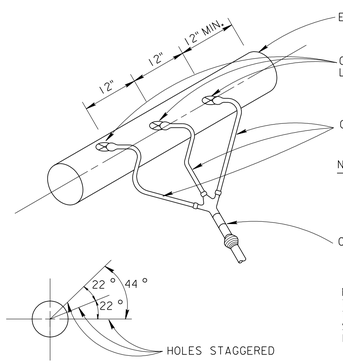

NOTE: WHERE CONNECTIONS ARE MADE BETWEEN FERROUS & COPPER PIPE, A DIELECTRIC UNION SHALL BE PROVIDED.

NOTE: THE NUMBER OF TAPS REQUIRED AND THE MAXIMUM SIZE OF CORPORATION STOPS AND OUTLETS SHALL BE INCLUDED IN THE SPECIFICATIONS.

TYPICAL GOOSENECK CONNECTION

NO SCALE

$$ – THINK VALUE ENGINEERING – $$

Revisions

Symbol	Descriptions	Date	Approved

U.S. ARMY ENGINEER DISTRICT
CORPS OF ENGINEERS
OMAHA, NEBRASKA

Designed by: X
Drawn by: X.
Checked by: X
Reviewed by:
Submitted by:
Chief: Section

SITE NAME — SITE LOCATION

OMAHA DISTRICT DESIGN GUIDE

WATER LINE DETAILS

Plot Scale Ratio: 1:12
Design File: waterdet.dgn
Date: JUNE 2002
Spec. No.: DACA 45
Contract No.: DACA 45
Drawing Code: X
Sheet reference number: U4.10

COMPUTER AIDED DESIGN & DRAFTING

d:\oddg\envir\waterdet.dgn 05/29/02 03:52:37 PM