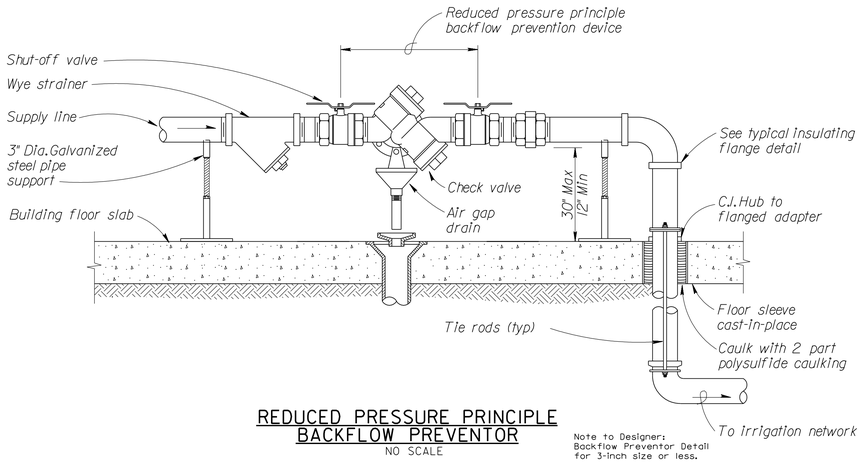

REDUCED PRESSURE PRINCIPLE BACKFLOW PREVENTOR

NO SCALE

Note to Designer:
Backflow Preventor Detail for 3-inch size or less.

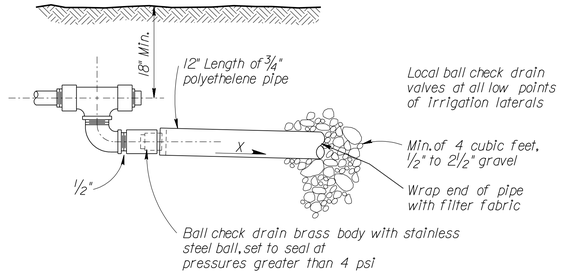

BALL CHECK DRAIN

NO SCALE

Note:
Automatic drain valves shall be installed only in the horizontal position and shall be installed with a one foot length of 3/4 " polyethylene plastic pipe placed over the outlet of the valve and a gravel sump installed around the plastic pipe as required for proper drainage. The plastic pipe shall prevent dirt particles from being washed back into the valve.

CASING SCHEDULE	
CARRIER PIPE DIAMETER	CASING DIAMETER
1/2"	2"
3/4"	3"
1"	3"
1 1/4"	4"
1 1/2"	4"
2"	6"
2 1/2"	6"
3"	8"
4"	10"

NOTES:
1. Irrigation lines crossing under pavement or sidewalk, shall be installed in casing pipe. Casing pipe material shall be compatible with the water pipe inside the casing.
2. Casing pipe shall be extended one foot beyond pavement or walk edges.

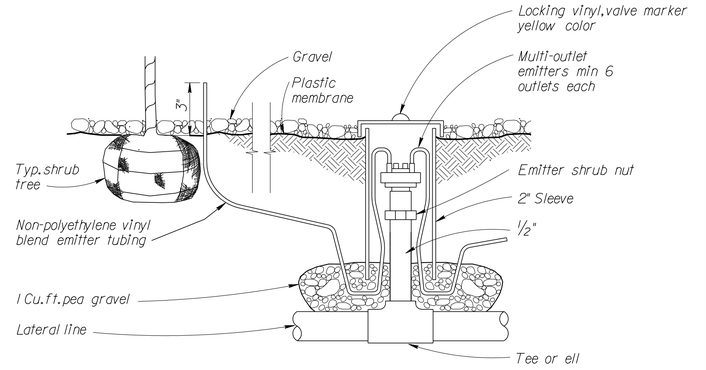

TYPICAL EMITTER DETAIL

NO SCALE

NOTE:
Install plastic membrane only in gravel area.

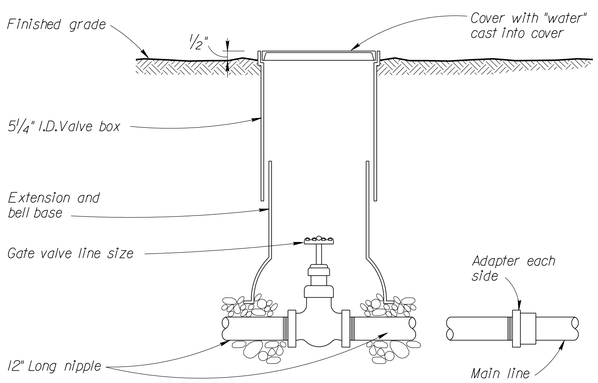

GATE VALVE DETAIL

NO SCALE

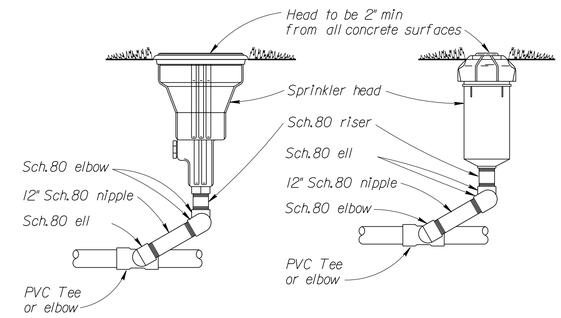

IMPACT POP-UP SPRINKLER (BOTTOM INLET)

NO SCALE

GEAR DRIVE POP-UP SPRINKLER

NO SCALE

NOTE:
Pop-up sprinkler adjust to finished grade once TURF is established.

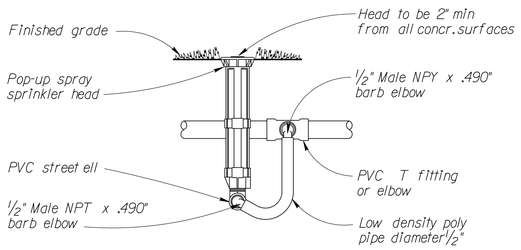

HIGH POP-UP SPRAY HEAD WITH SWING PIPE & FITTINGS

NO SCALE

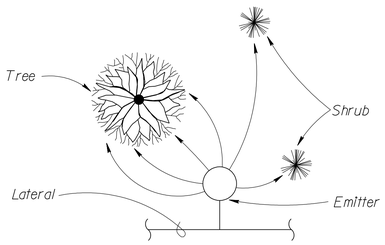

TYPICAL EMITTER DETAIL PLAN

NO SCALE

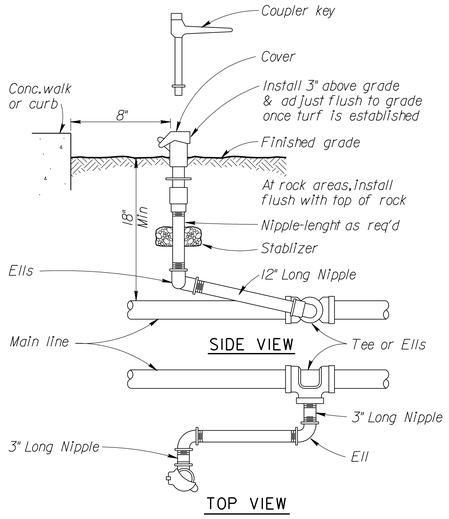

QUICK COUPLER

NO SCALE

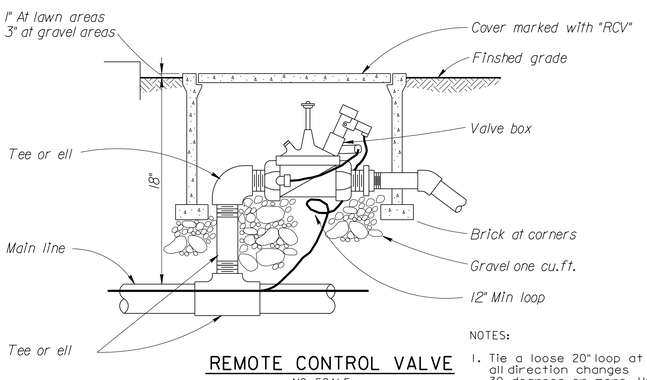

REMOTE CONTROL VALVE

NO SCALE

NOTES:
1. Tie a loose 20" loop at all direction changes 30 degrees or more. Untie after connections are completed.

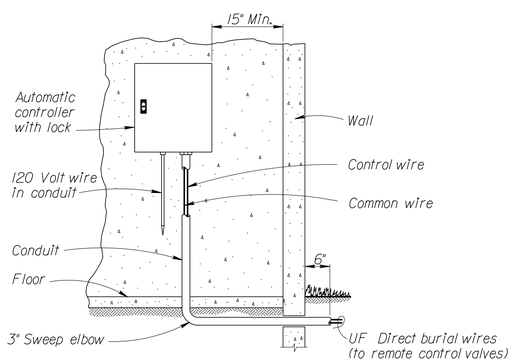

INTERIOR AUTOMATIC CONTROLLER DETAIL

(ELECTRIC WALL MOUNT)
NO SCALE

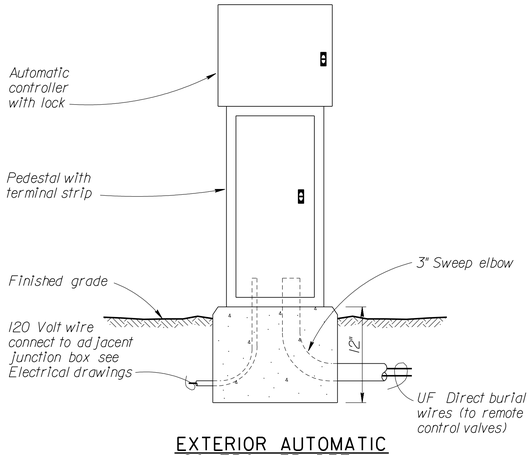

EXTERIOR AUTOMATIC CONTROLLER DETAIL

NO SCALE

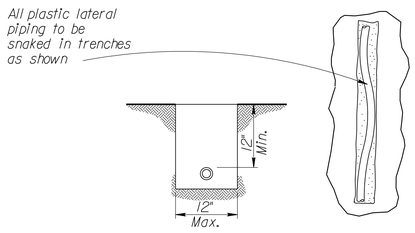

LATERAL PIPING TRENCHING DETAILS

NO SCALE

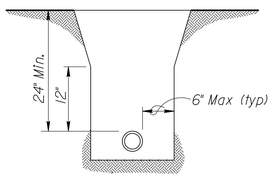

IRRIGATION MAIN TRENCHING DETAIL

NO SCALE

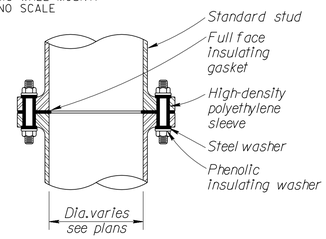

TYPICAL INSULATING FLANGE DETAIL

NO SCALE

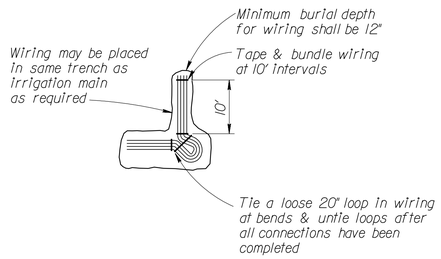

TRENCH DETAILS-CONTROL WIRING

NO SCALE

COMPUTER AIDED DESIGN & DRAFTING

$$ – THINK VALUE ENGINEERING – $$

Revisions

Symbol	Descriptions	Date	Approved

U.S. ARMY ENGINEER DISTRICT
CORPS OF ENGINEERS
OMAHA, NEBRASKA

Designed by:
Drawn by:
Checked by:
Reviewed by:
Submitted by:
Chief: Section

SITE NAME: OMAHA DISTRICT DESIGN GUIDE
SITE LOCATION

SPRINKLER SYSTEM DETAILS

Plot Scale Ratio:
Design File:
Date: JUNE 2002
Spec. No.: DACA 45
Drawing Code: X
Contract No.: DACA 45
Sheet reference number: U4.07

d:\oddg\envir\spsysdt2.dgn 05/29/02 03:38:13 PM