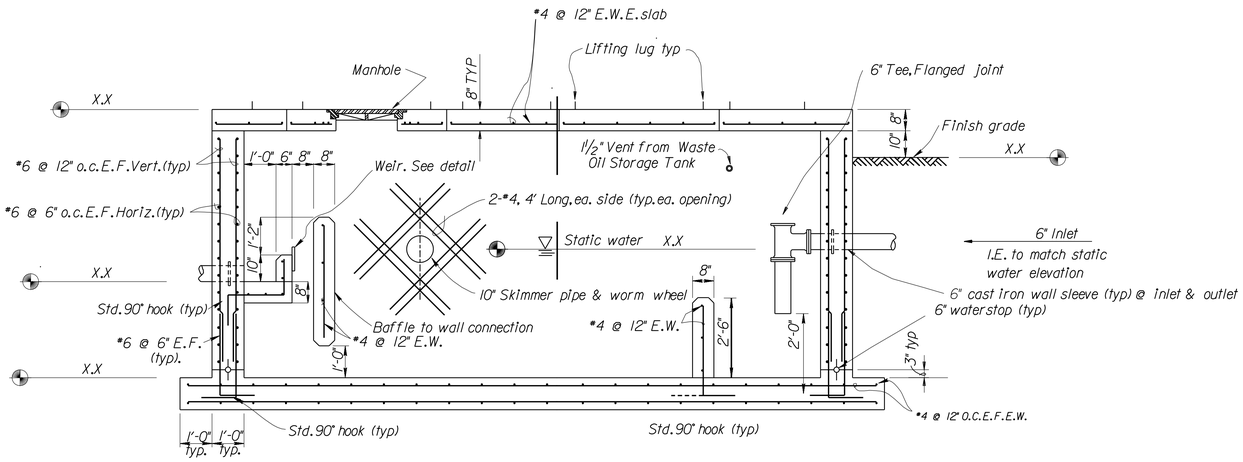

SECTION 1

SCALE: ½ INCH = 1 FOOT

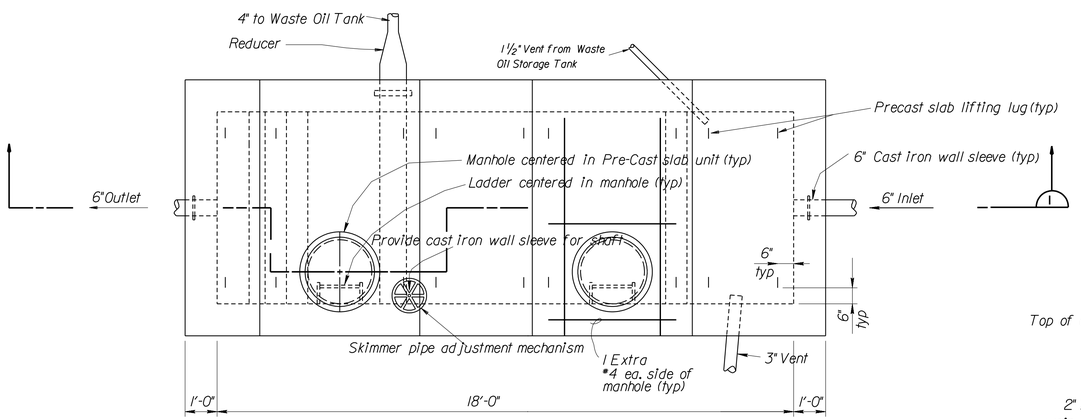

TOP SLAB PLAN

SCALE: ½ INCH = 1 FOOT

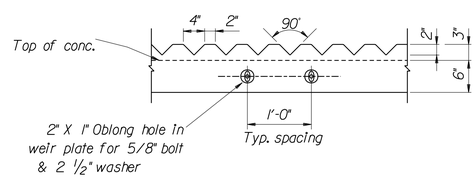

WEIR DETAIL

NO SCALE

MATERIAL NOTES

1. Reinforced Concrete:

a. Concrete: Specified Compressive Strength f'c=4000 psi, at 28 days.

b. Reinforcing Bars: Specified Yield Strength Fy=60 ksi. (Grade 60)

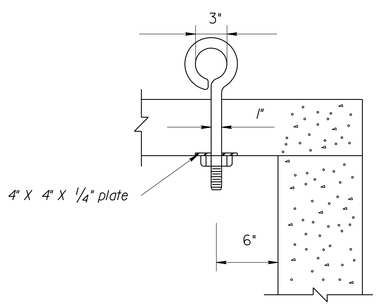

LIFTING LUG

No Scale

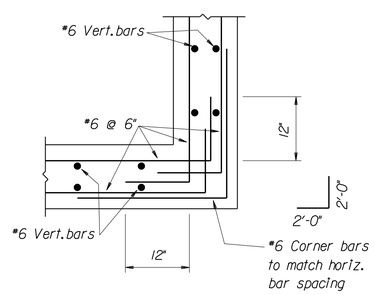

TYPICAL CORNER DETAIL

NO SCALE

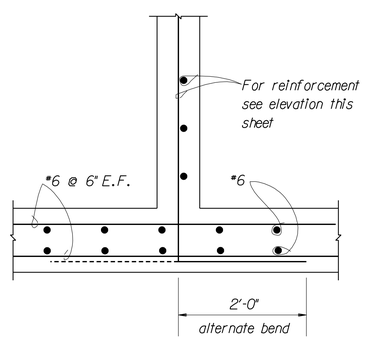

BAFFLE TO WALL DETAIL TYP.

NO SCALE

$$ – THINK VALUE ENGINEERING – $$

Revisions

Symbol	Descriptions	Date	Approved

U.S. ARMY ENGINEER DISTRICT
CORPS OF ENGINEERS
OMAHA, NEBRASKA

Designed by:
Drawn by:
Checked by:
Reviewed by:
Submitted by:
Chief: Section

SITE NAME — SITE LOCATION

OMAHA DISTRICT DESIGN GUIDE

OIL/WATER SEPARATOR DETAILS

Plot Scale Ratio:
Design File:
Date: JUNE 2002
Spec. No.: DACA 45
Contract No.: DACA 45
Drawing Code: X
Sheet reference number: U4.05

COMPUTER AIDED DESIGN & DRAFTING

d:\oddg\envir\oilsep.dgn 05/29/02 03:07:18 PM