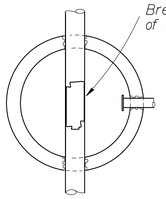

Plan View

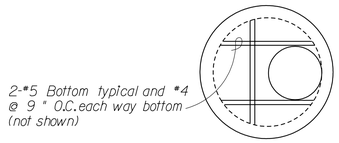

Top Slab Reinforcement Detail

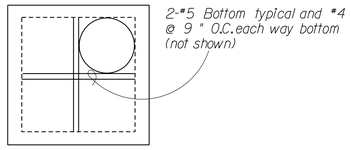

Square Vault Top Slab Reinforcement Detail

NOTE TO DESIGNER: If opening is not at edge of top slab, provide 2-#5 all four sides of opening. If manhole is larger than 4'-0" and less than 6'-0", use 12" thick top slab reinforced as shown. If manhole is larger than 6'-0" OR is located in a trafficed area, see Structures and Bridges Section.

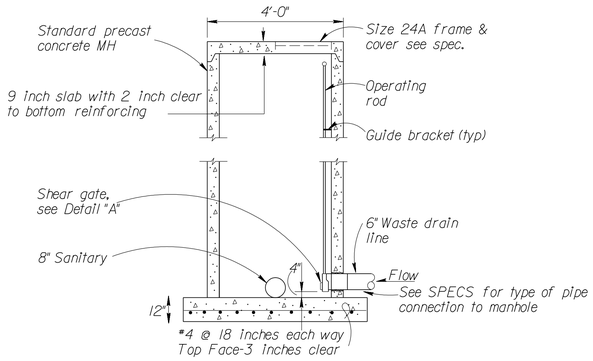

MANHOLE WITH SHEAR GATE
ORIFICE PLATE

NO SCALE

NOTES:
1. Eccentric cone may be provided in lieu of flat top.
2. Manhole opening shall be above shear gate operating rod.

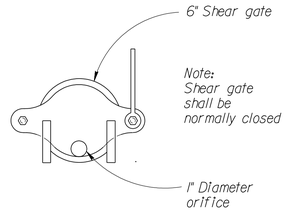

DETAIL A

NO SCALE

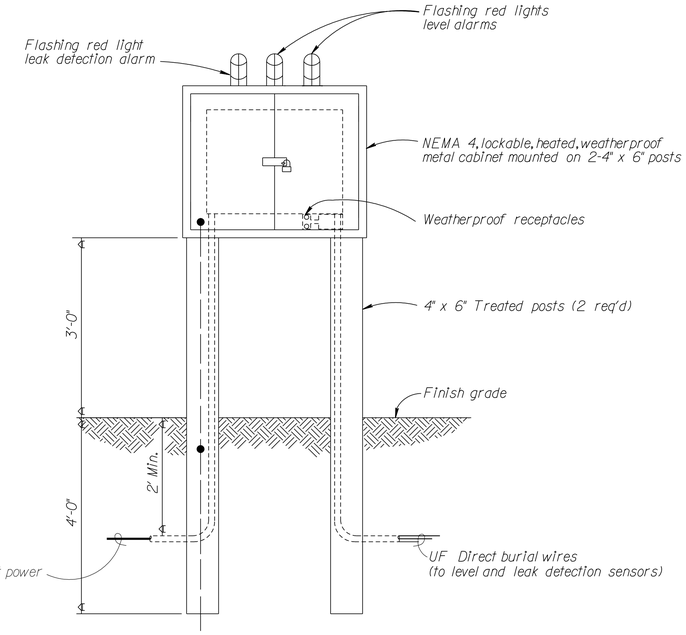

EQUIPMENT CABINET DETAIL

NO SCALE

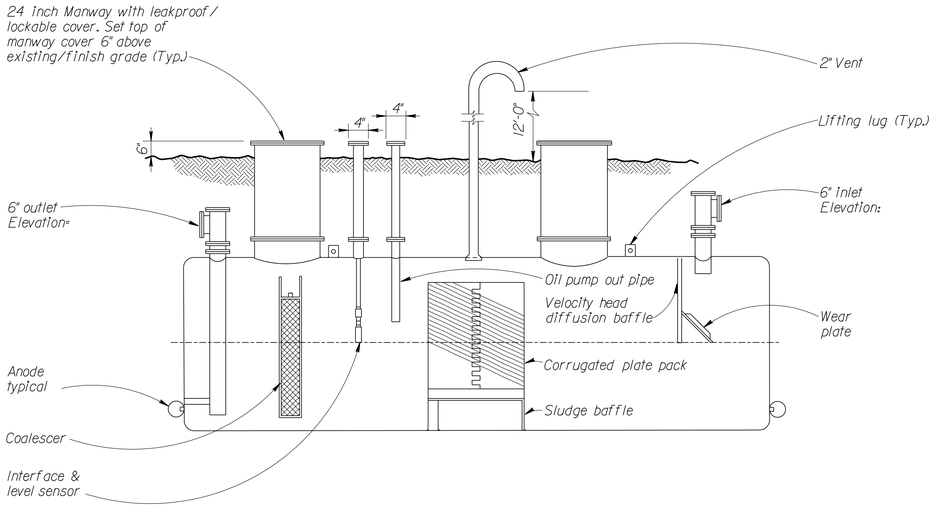

GPM DOUBLE WALLED OIL/WATER INTERCEPTOR (TYP)

NO SCALE

NOTES:
1. This detail shows characteristics of a typical o/w interceptor: see specifications for further information and performance requirements.
2. Contractor shall provide concrete hold down pad, tie down straps, and other miscellaneous equipment. Installation shall be per manufacturer's recommendations.
3. Provide suitable transition fittings between inlet and outlet to the oil/water interceptor.

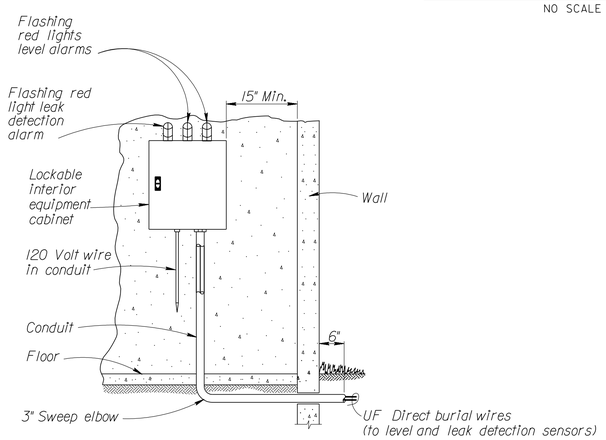

INTERIOR EQUIPTMENT CABINET DETAIL

(ELECTRIC WALL MOUNT)
NO SCALE

$$ – THINK VALUE ENGINEERING – $$

Revisions

Symbol	Descriptions	Date	Approved

U.S. ARMY ENGINEER DISTRICT
CORPS OF ENGINEERS
OMAHA, NEBRASKA

Designed by:
Drawn by:
Checked by:
Reviewed by:
Submitted by:
Chief: Section

SITE NAME — SITE LOCATION

OMAHA DISTRICT DESIGN GUIDE

OIL/WATER INTERCEPTOR DETAILS

Plot Scale Ratio:
Design File:
Spec. No.: DACA 45
Contract No.: DACA 45
Date: JUNE 2002
Drawing Code: X
Sheet reference number: U4.04

COMPUTER AIDED DESIGN & DRAFTING

d:\oddg\envir\oilinter.dgn 05/29/02 03:03:40 PM