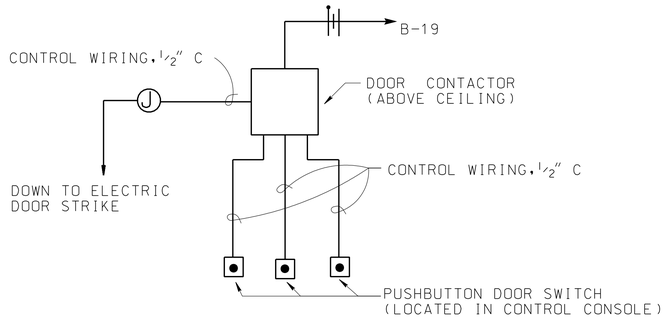

ELECTRIC DOOR STRIKE - ONE LINE DIAGRAM

NO SCALE

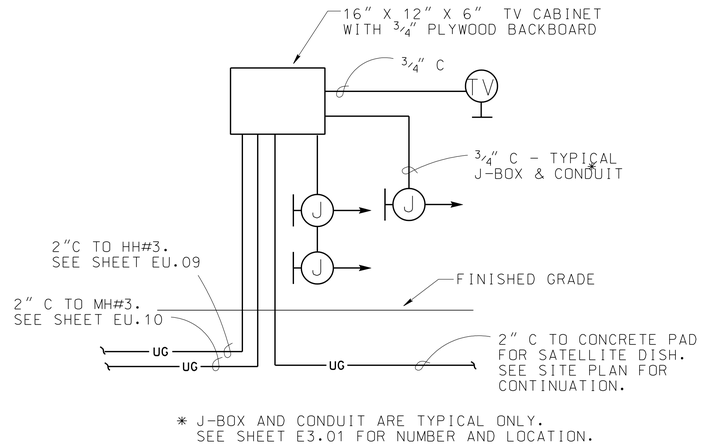

CCTV - ONE LINE DIAGRAM

NO SCALE

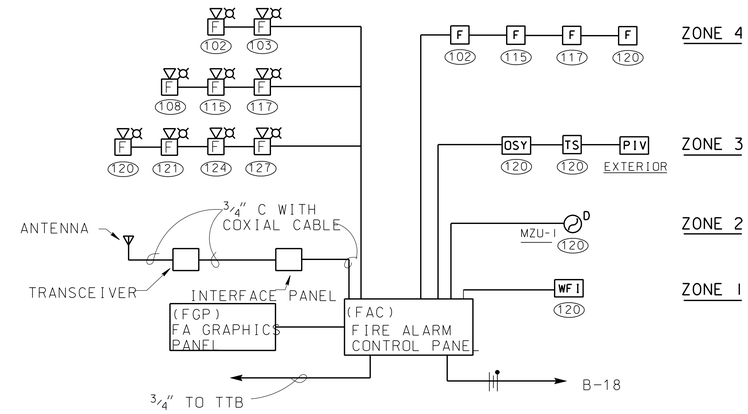

FIRE ALARM - ONE LINE DIAGRAM

NO SCALE

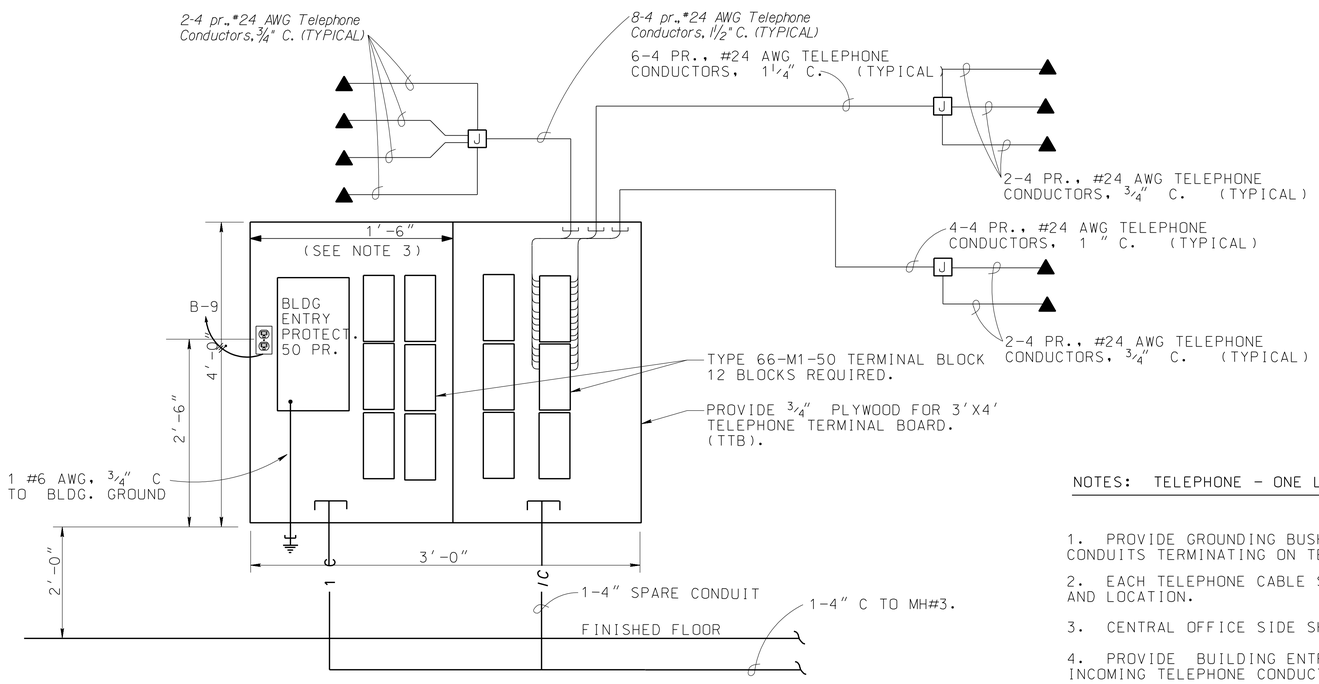

TELEPHONE - ONE LINE DIAGRAM

NO SCALE

NOTES: TELEPHONE - ONE LINE DIAGRAM

1. PROVIDE GROUNDING BUSHINGS (SEE DETAIL) FOR ALL CONDUITS TERMINATING ON TELEPHONE BACKBOARD.
2. EACH TELEPHONE CABLE SHALL BE TAGGED WITH ROOM NUMBER AND LOCATION.
3. CENTRAL OFFICE SIDE SHALL BE PAINTED GREEN.
4. PROVIDE BUILDING ENTRY PROTECTOR FOR FUTURE 50 PAIR OF INCOMING TELEPHONE CONDUCTORS.
5. OUTLETS SHOWN ON TELEPHONE ONE LINE DIAGRAM ARE TYPICAL ONLY. SEE FLOOR PLANS FOR LOCATION AND NUMBER OF ALL OUTLETS.
6. ALL TELEPHONE OUTLETS SHALL BE LABELED WITH 1/4" LETTERS. IDENTIFY EACH TELEPHONE OUTLET.

EXAMPLE 100% DESIGN

$$ – THINK VALUE ENGINEERING – $$

Revisions

Symbol	Descriptions	Date	Approved

U.S. ARMY ENGINEER DISTRICT
CORPS OF ENGINEERS
OMAHA, NEBRASKA

Designed by: XXX
Drawn by: XXX
Checked by: XXX
Reviewed by: XXX
Submitted by:
Chief: ELECTRICAL Section

SITE NAME — SITE LOCATION
OMAHA DISTRICT DESIGN GUIDE

ONE-LINE DIAGRAMS

Plot Scale Ratio: 8:1
Design File: oddga001.dgn
Date: JUNE 2002
Spec. No.: DACA 45
Contract No.: DACA 45
Drawing Code: X
Sheet reference number: **E5.02**

COMPUTER AIDED DESIGN & DRAFTING

d:\oddg\elec\ex__e502.dgn 05/29/02 12:48:06 PM