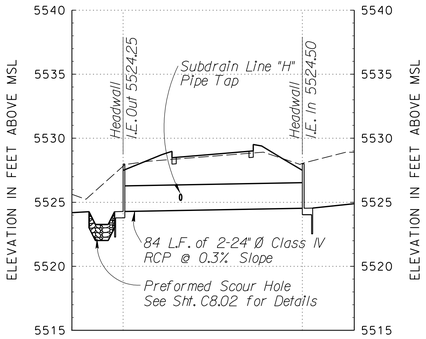

CULVERT "A" PROFILE
SCALE: VERT. 1 INCH = 5 FEET
HORIZ. 1 INCH = 30 FEET

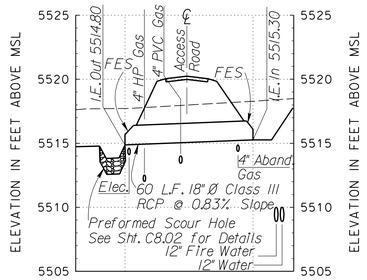

CULVERT "B" PROFILE
SCALE: VERT. 1 INCH = 5 FEET
HORIZ. 1 INCH = 30 FEET

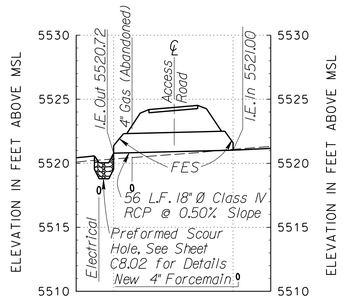

CULVERT "C" PROFILE
SCALE: VERT. 1 INCH = 5 FEET
HORIZ. 1 INCH = 30 FEET

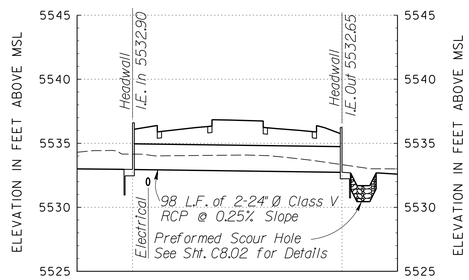

CULVERT "F" PROFILE
SCALE: VERT. 1 INCH = 5 FEET
HORIZ. 1 INCH = 30 FEET

CULVERT SCHEDULE

CULVERT NO.	INVERT ELEV. IN	INVERT ELEV. OUT	PER CENT OF GRADE	LENGTH OF PIPE (FEET)	R.C.P. SIZE (IN.)	R.C.P. CLASS	REMARKS
A	24.50	24.25	0.3	84	24	IV	2-24" Ø PIPE
B	15.30	14.80	0.83	60	18	III	
C	21.00	20.72	0.5	56	18	IV	
F	32.90	32.65	0.25	98	24	V	2-24" Ø PIPE

LEGEND:

A. I.	Area Inlet
C. I.	Curb Inlet
M. H.	Manhole
O. R.	Observation Riser
P.V.C.	Polyvinyl Chloride
J. Box	Junction Box
H. W.	Headwall
F.E.S.	Flared End Section
R.C.P.	Reinforced Concrete Pipe

NOTES:

1. ALL CULVERT DIMENSIONS ARE FROM FACE OF HEADWALL TO FACE OF HEADWALL OR FROM END OF FLARED END SECTION.
2. FOR STORM DRAIN OR CULVERT PIPES UP TO AND INCLUDING 36 INCHES IN DIAMETER, PLASTIC PIPE MAY BE SUBSTITUTED FOR CLASS III R.C.P. SEE SPECIFICATIONS AND SHEET C8.02 FOR PLASTIC PIPE BEDDING REQUIREMENTS.

SCALE. 1 INCH = 5 FEET
5' 0 5'
SCALE: 1 INCH = 30 FEET
30' 0 30'

COMPUTER AIDED DESIGN & DRAFTING

$$ – THINK VALUE ENGINEERING – $$

Revisions

Symbol	Descriptions	Date	Approved

U.S. ARMY ENGINEER DISTRICT
CORPS OF ENGINEERS
OMAHA, NEBRASKA

Designed by:
Drawn by:
Checked by:
Reviewed by:
Submitted by:
Chief: Section

SITE NAME SITE LOCATION

OMAHA DISTRICT DESIGN GUIDE

CULVERT PROFILES AND SCHEDULE

Plot Scale Ratio:
Design File:
Date: X
Spec. No.: DACA 45
Drawing Code: X
Contract No.: DACA 45
Sheet reference number: **C5.03**

d:\oddg\civil\bu03c503.dgn 05/28/02 04:02:51 PM