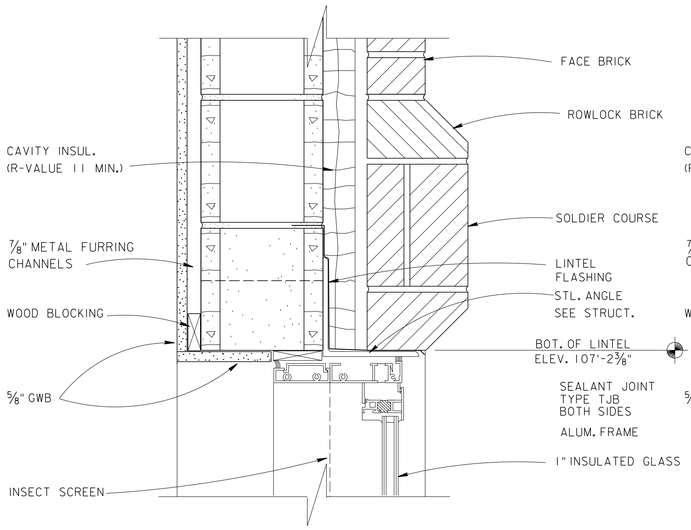

HEAD DETAIL (A)
SCALE : 3"=1'-0"
A5.02 | A7.02
A6.01

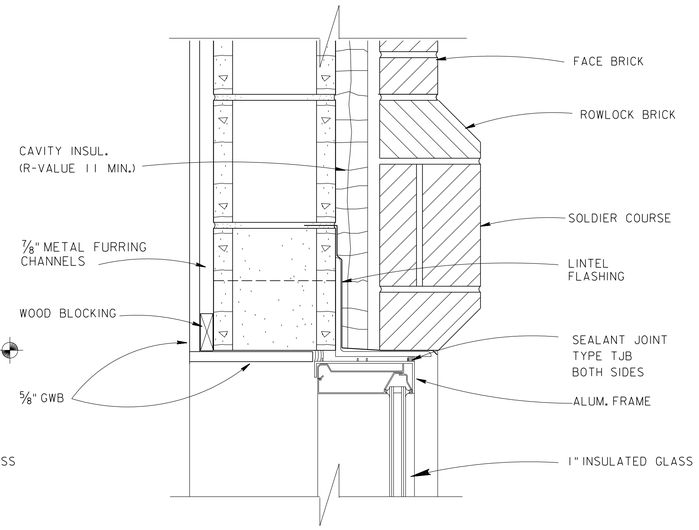

HEAD DETAIL (D)
SCALE : 3"=1'-0"
A6.01 | A7.02

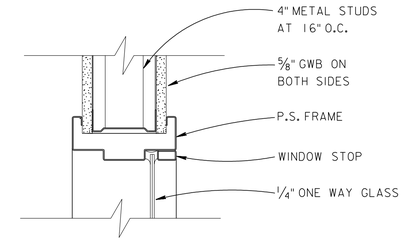

HEAD DETAIL (G)
SCALE : 3"=1'-0"
A6.01 | A7.02

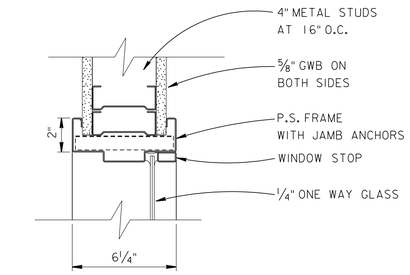

JAMB DETAIL (H) OPP.
SCALE : 3"=1'-0"
A6.01 | A7.02

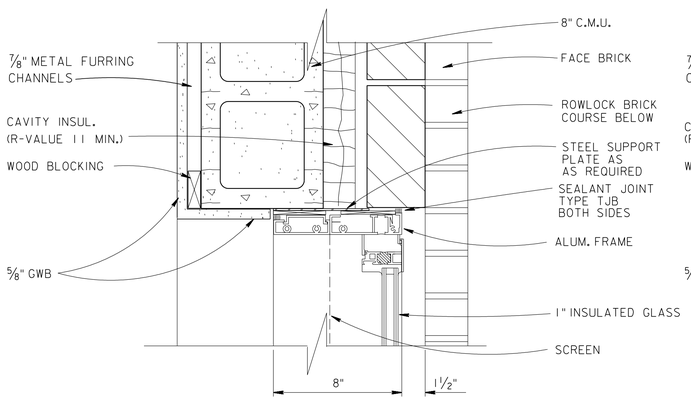

JAMB DETAIL (B) OPP.
SCALE : 3"=1'-0"
A6.01 | A7.02

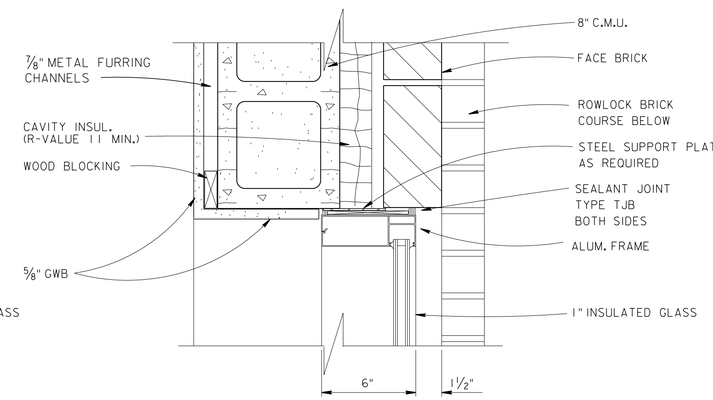

JAMB DETAIL (E)
SCALE : 3"=1'-0"
A6.01 | A7.02

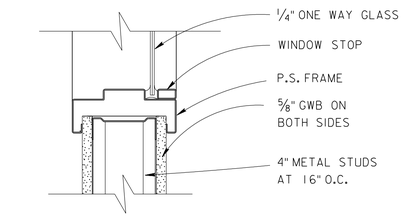

SILL DETAIL (J)
SCALE : 3"=1'-0"
A6.01 | A7.02

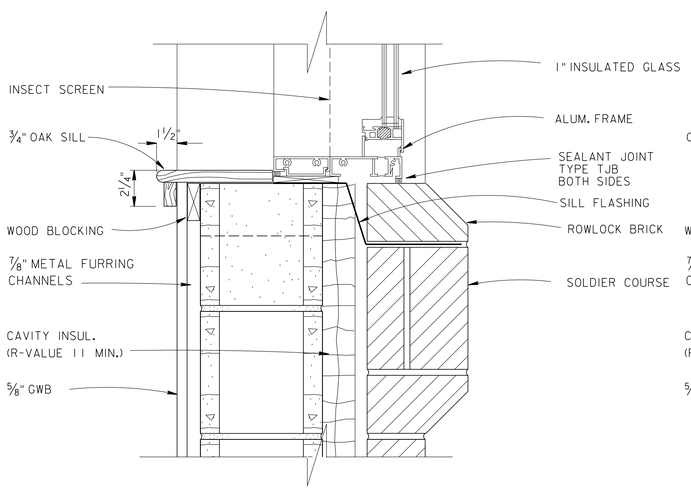

SILL DETAIL (C)
SCALE : 3"=1'-0"
A5.02 | A7.02
A6.01

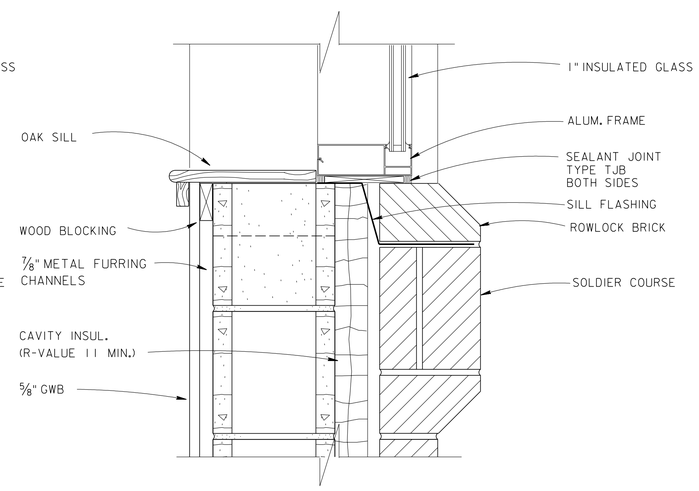

SILL DETAIL (F)
SCALE : 3"=1'-0"
A6.01 | A7.02

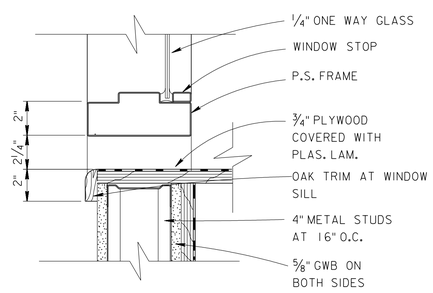

SILL DETAIL (K)
SCALE : 3"=1'-0"
A6.01 | A7.02

COMPUTER AIDED DESIGN & DRAFTING

$$ – THINK VALUE ENGINEERING – $$

Revisions

Symbol	Descriptions	Date	Approved

U.S. ARMY ENGINEER DISTRICT
CORPS OF ENGINEERS
OMAHA, NEBRASKA

Designed by: M.D.M.
Drawn by: M.D.M.
Checked by: G.F.B.
Reviewed by:
Submitted by:
Chief: ARCH. Section

SITE NAME — SITE LOCATION

OMAHA DISTRICT DESIGN GUIDE

WINDOW AND MISC. DETAILS

Plot Scale Ratio: X
Design File: oddga015.dgn
Date: JUNE 2002
Spec. No.: DACA 45
Contract No.: DACA 45
Drawing Code: X
Sheet reference number: A7.02