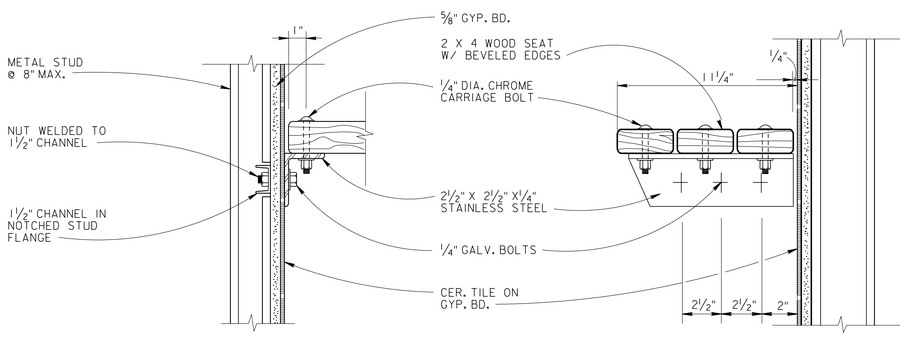

DETAIL AND SECTION (A) A1.02 A9.01

SCALE. 3 INCHES = 1 FOOT

0 3" 6" 12"

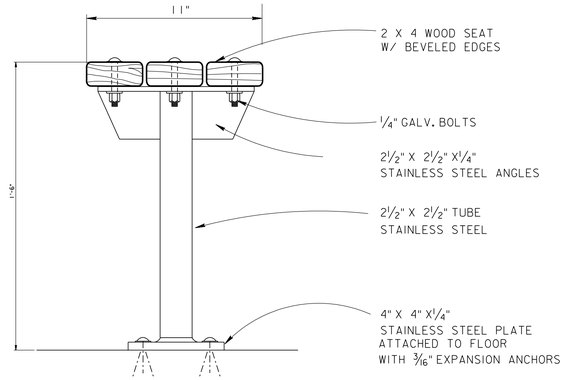

BENCH DETAIL (B) A1.02 A9.01

SCALE. 3 INCHES = 1 FOOT

0 3" 6" 12"

BENCH DETAIL (C) A1.02 A9.01

SCALE. 3 INCHES = 1 FOOT

0 3" 6" 12"

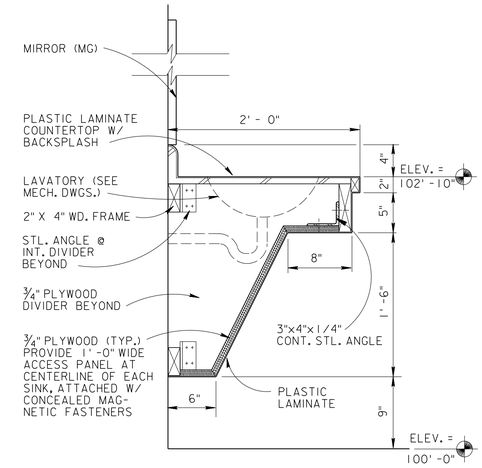

DETAIL (D) A1.02 A9.01

SCALE : 1 1/2" = 1'-0"

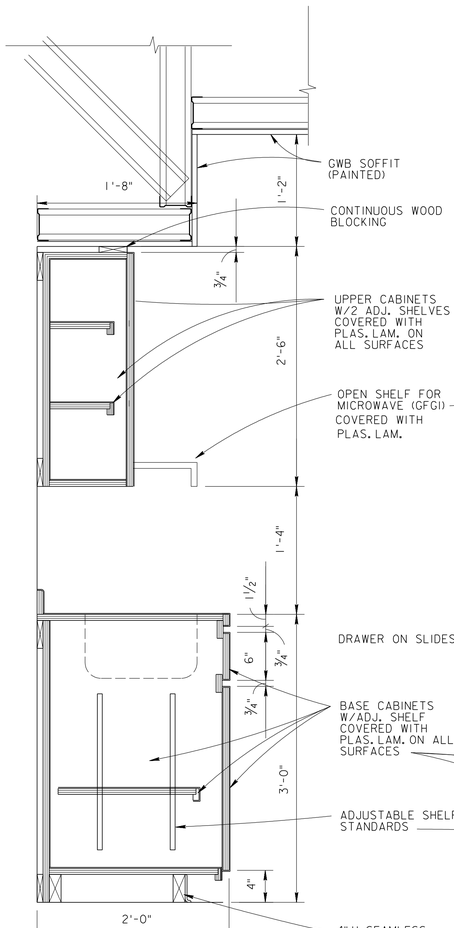

SECTION (3) A4.02 A9.01

SCALE : 1 1/2" = 1'-0"

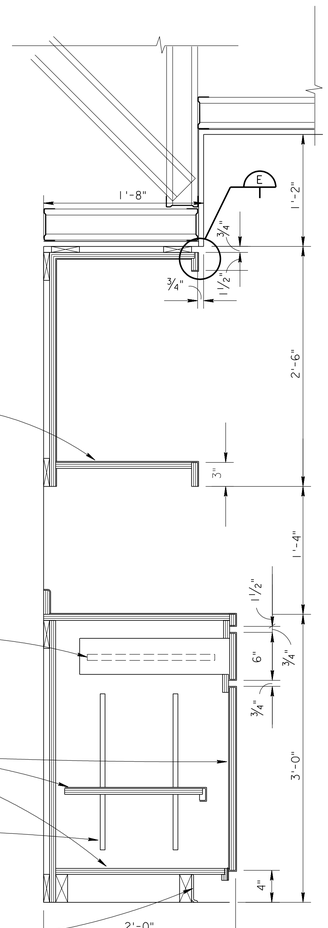

SECTION (4) A4.02 A9.01

SCALE : 1 1/2" = 1'-0"

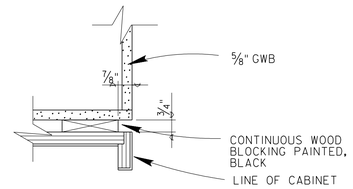

SOFFIT DETAIL (E)

SCALE: 3 INCHES = 1 FOOT

0 3" 6" 12"

$$ – THINK VALUE ENGINEERING – $$

Revisions

Symbol	Descriptions	Date	Approved

U.S. ARMY ENGINEER DISTRICT
CORPS OF ENGINEERS
OMAHA, NEBRASKA

Designed by: M.D.M.
Drawn by: M.D.M.
Checked by: G.F.B.
Reviewed by:
Submitted by:
Chief: ARCH. Section

SITE NAME: OMAHA DISTRICT DESIGN GUIDE
SITE LOCATION

MISC. SECTIONS & DETAILS

Plot Scale Ratio: X
Design File: oddga014.dgn
Date: JUNE 2002
Spec. No.: DACA 45
Contract No.: DACA 45
Drawing Code: X
Sheet reference number: A9.01

COMPUTER AIDED DESIGN & DRAFTING

D:\oddg\arch\oddga014.dgn 05/28/02 10:29:35 AM