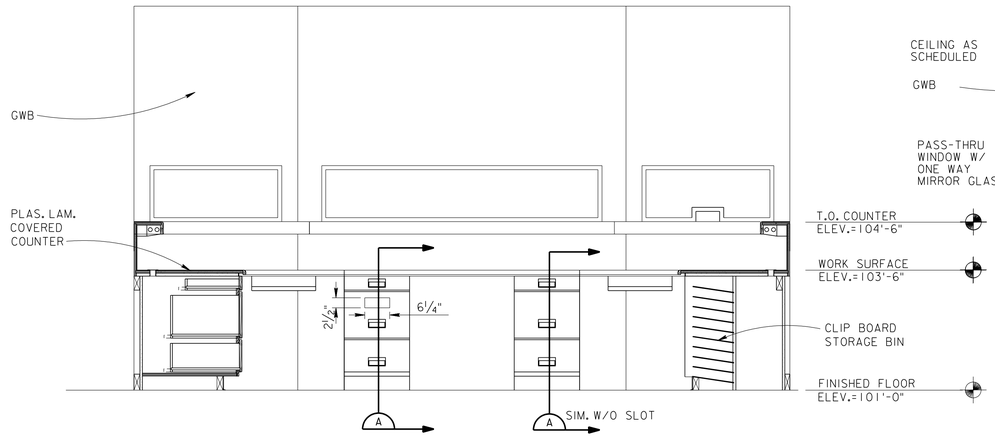

FCC CABINET ELEVATION (1)

SCALE: 3/4 INCH = 1FOOT

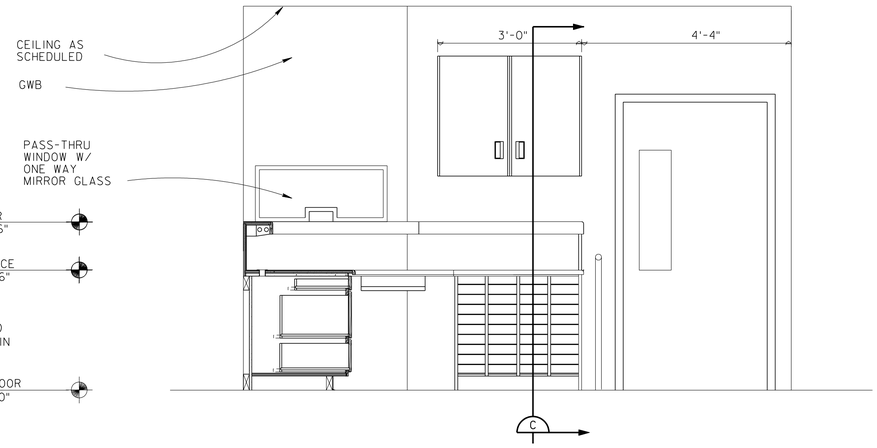

FCC RM. CABINET ELEVATION (3)

SCALE: 3/4 INCH = 1FOOT

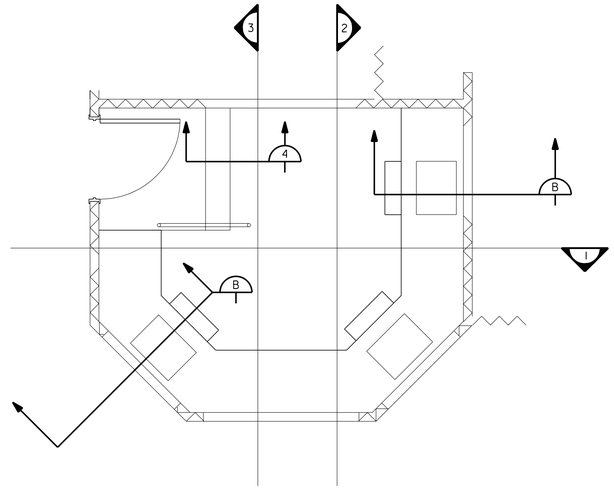

KEY PLAN ROOM
125 FCC OFFICE

N.T.S.

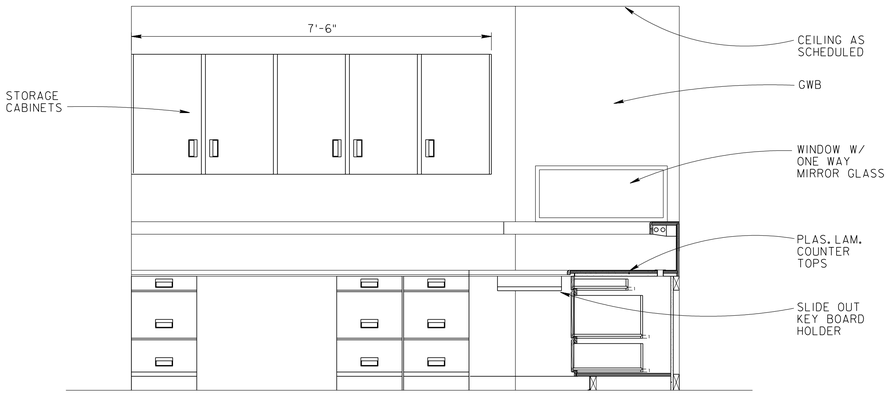

FCC RM. CABINET ELEVATION (2)

SCALE: 3/4 INCH = 1FOOT

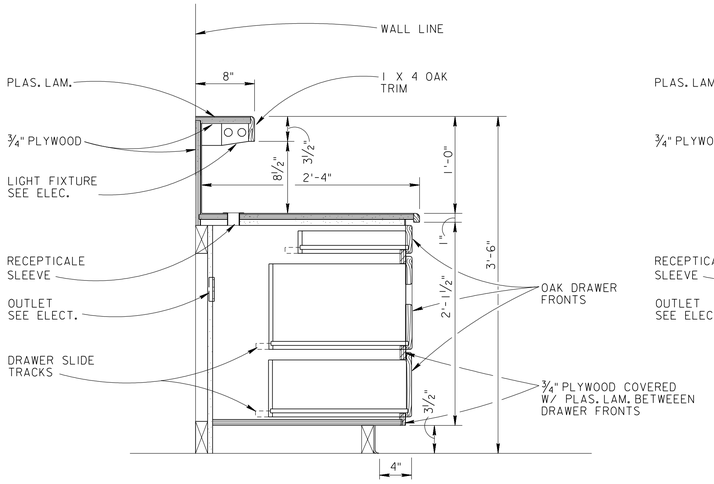

CABINET DETAIL (A)

SCALE: 1 1/2 INCH = 1FOOT

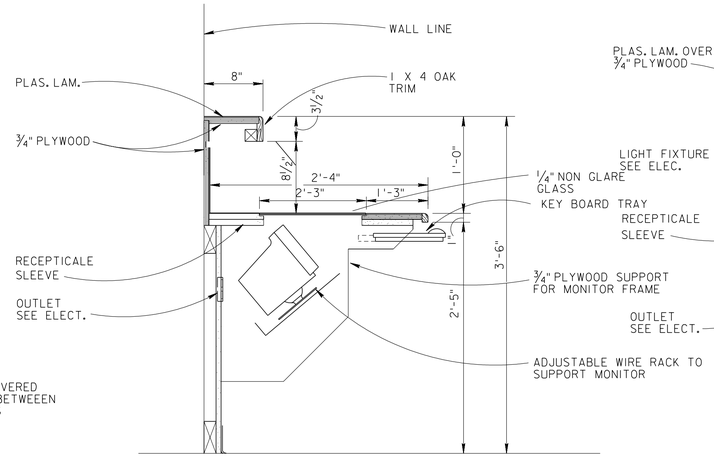

CABINET DETAIL (B)

SCALE: 1 1/2 INCH = 1FOOT

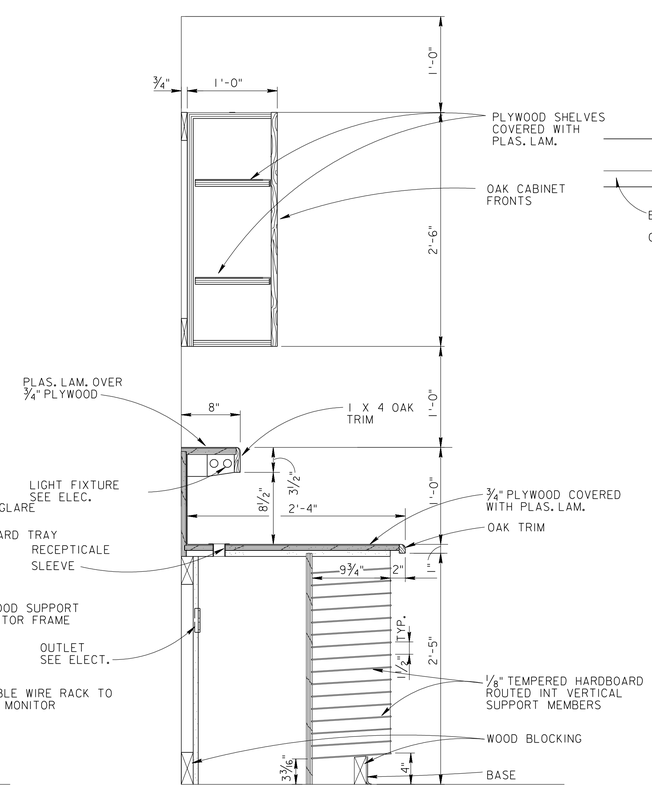

CABINET DETAIL (C)

SCALE: 1 1/2 INCH = 1FOOT

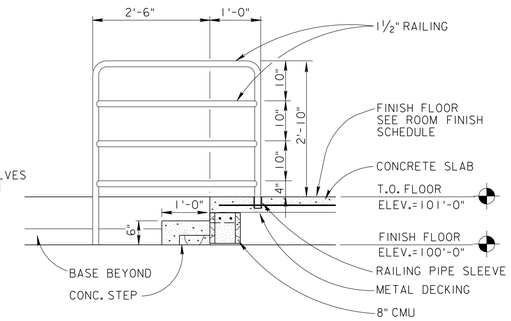

STEP AND RAILING DETAIL (4)

SCALE: 3/4 INCH = 1FOOT

$$ – THINK VALUE ENGINEERING – $$

Revisions

Symbol	Descriptions	Date	Approved

U.S. ARMY ENGINEER DISTRICT
CORPS OF ENGINEERS
OMAHA, NEBRASKA

Designed by: M.D.M.
Drawn by: R.P./M.D.M.
Checked by: M.D.M.
Reviewed by:
Submitted by:
Chief: ARCH. Section

SITE NAME: OMAHA DISTRICT DESIGN GUIDE
SITE LOCATION

CASEWORK ELEVATIONS DETAILS

Plot Scale Ratio: 1.3333:1
Design File: oddga013.dgn
Date: JUNE 2002
Spec. No.: DACA 45
Drawing Code: X
Contract No.: DACA 45
Sheet reference number: **A4.03**

COMPUTER AIDED DESIGN & DRAFTING

D:\oddg\arch\oddga013.dgn 05/28/02 10:10:57 AM