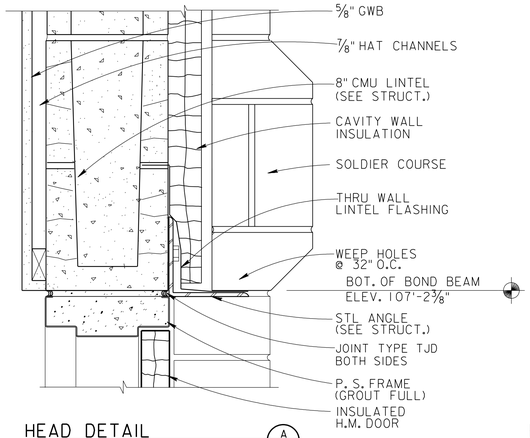

HEAD DETAIL (A)
SCALE : 3"=1'-0"
A5.02 | A7.01
A6.01

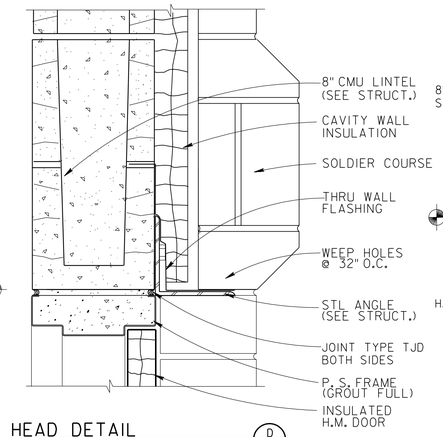

HEAD DETAIL (D)
SCALE : 3"=1'-0"
A6.01 | A7.01

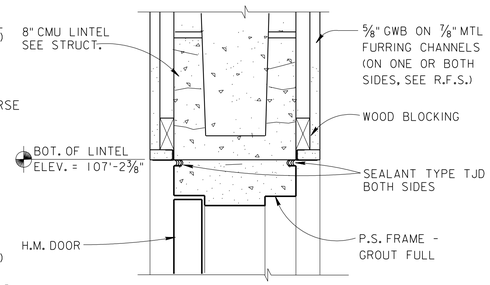

HEAD DETAIL (H)
SCALE : 3"=1'-0"
A6.01 | A7.01

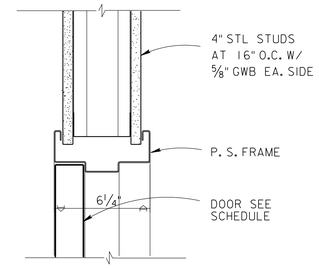

HEAD (L)
SCALE : 3"=1'-0"
A6.01 | A7.01

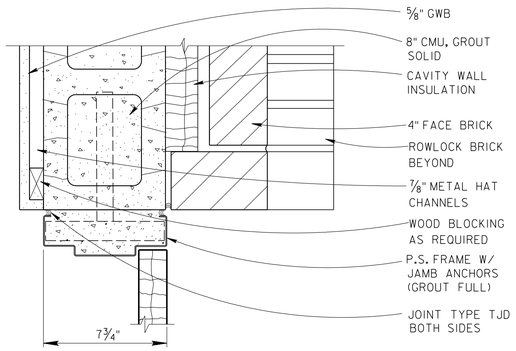

JAMB DETAIL (B)
SCALE : 3"=1'-0"
A6.01 | A7.01

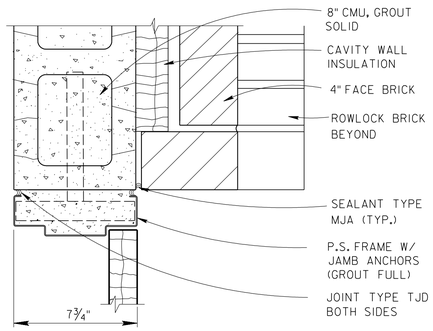

JAMB DETAIL (E)
SCALE : 3"=1'-0"
A6.01 | A7.01

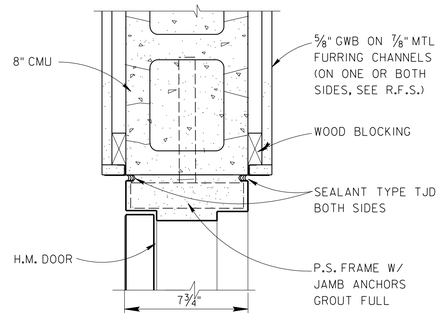

JAMB DETAIL (J)
SCALE : 3"=1'-0"
A6.01 | A7.01

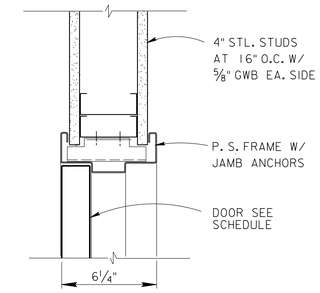

JAMB (M)
SCALE : 3"=1'-0"
A6.01 | A7.01

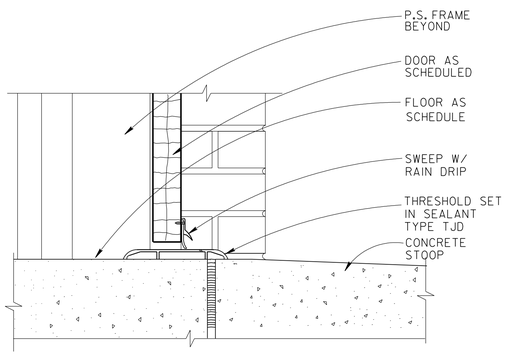

SILL DETAIL (C)
SCALE : 3"=1'-0"
A5.02 | A7.01
A6.01

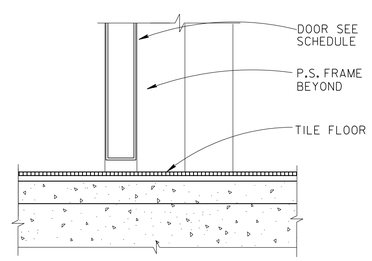

SILL (K)
SCALE : 3"=1'-0"
A6.01 | A7.01

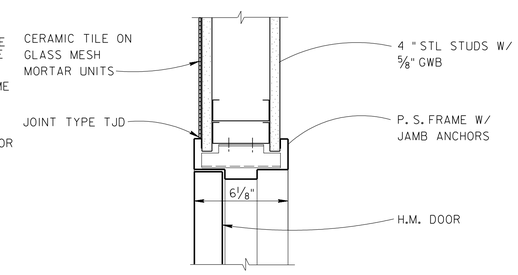

JAMB (N)
SCALE : 3"=1'-0"
A6.01 | A7.01

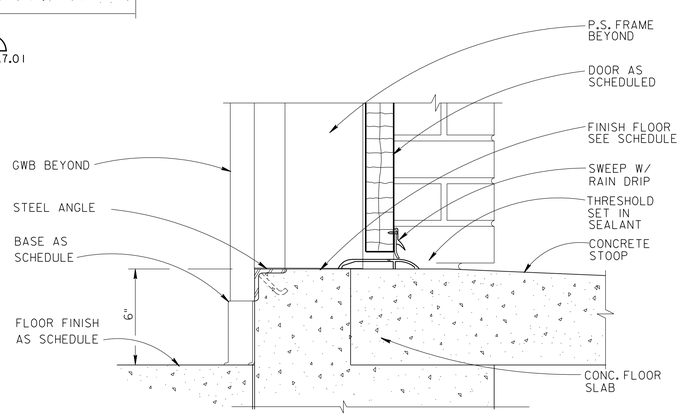

SILL DETAIL (G)
SCALE : 3"=1'-0"
A6.01 | A7.01

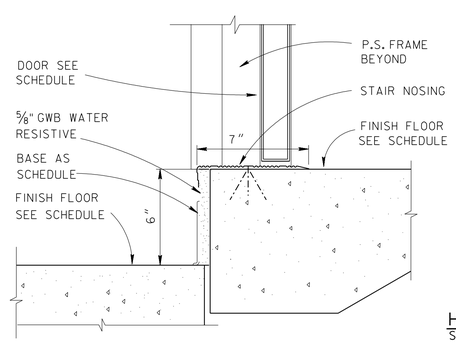

SILL DETAIL (W)
SCALE : 3"=1'-0"
A6.01 | A7.01

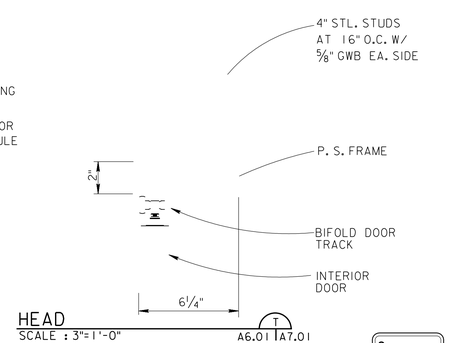

HEAD (T)
SCALE : 3"=1'-0"
A6.01 | A7.01

SCALE. 3 INCHES = 1 FOOT
0 3" 6" 12"

COMPUTER AIDED DESIGN & DRAFTING

$$ – THINK VALUE ENGINEERING – $$

Revisions

Symbol	Descriptions	Date	Approved

U.S. ARMY ENGINEER DISTRICT
CORPS OF ENGINEERS
OMAHA, NEBRASKA

Designed by: M.D.M.
Drawn by: R.P.
Checked by: M.D.M.
Reviewed by:
Submitted by:
Chief: ARCH. Section

SITE NAME — SITE LOCATION
OMAHA DISTRICT DESIGN GUIDE

DOOR DETAILS

Plot Scale Ratio: 4:1
Design File: oddga009.dgn
Date: JUNE 2002
Spec. No.: DACA 45
Contract No.: DACA 45
Drawing Code: X
Sheet reference number: A7.01

D:\oddg\arch\oddga009.dgn 05/28/02 09:18:49 AM