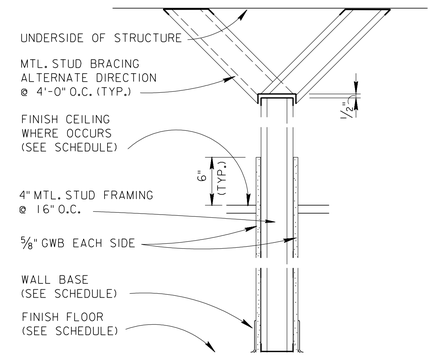

SCALE : 1 1/2"=1'-0"

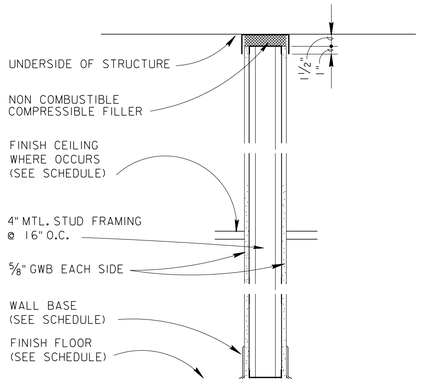

SCALE : 1 1/2"=1'-0"

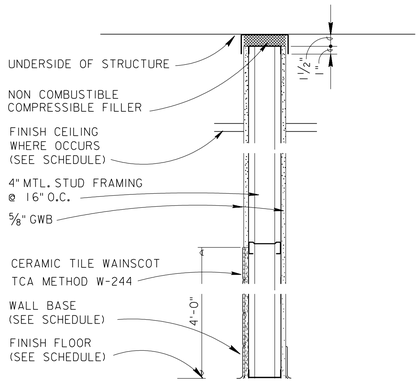

SCALE : 1 1/2"=1'-0"

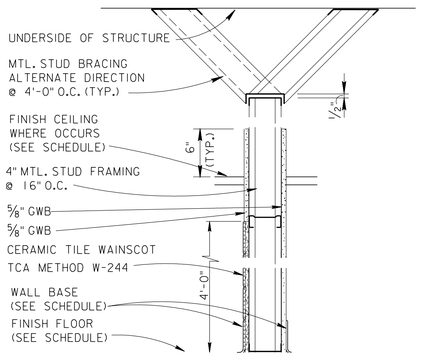

SCALE : 1 1/2"=1'-0"

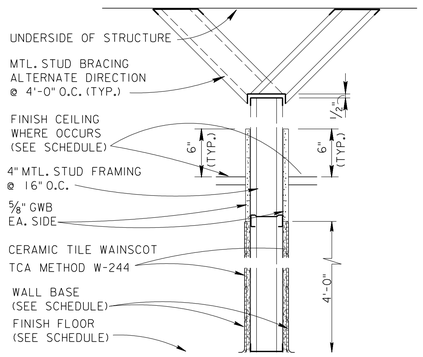

SCALE : 1 1/2"=1'-0"

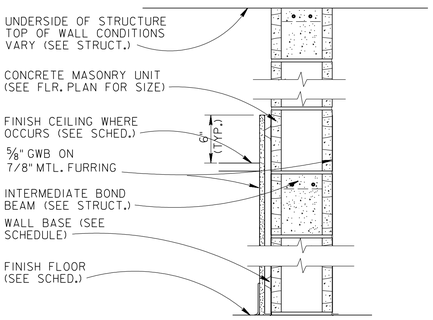

CONCRETE MASONRY UNIT 6

SCALE : 1 1/2"=1'-0"

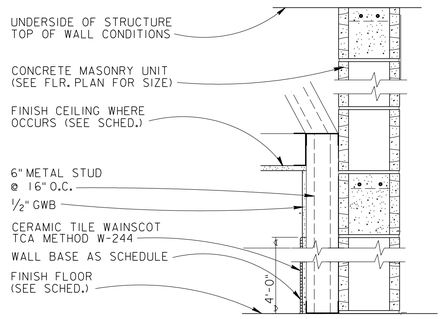

CONC. MASONRY UNIT 7

SCALE : 1 1/2"=1'-0"

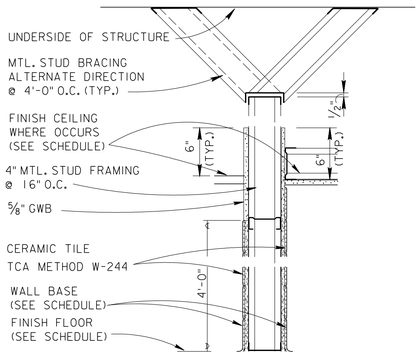

SCALE : 1 1/2"=1'-0"

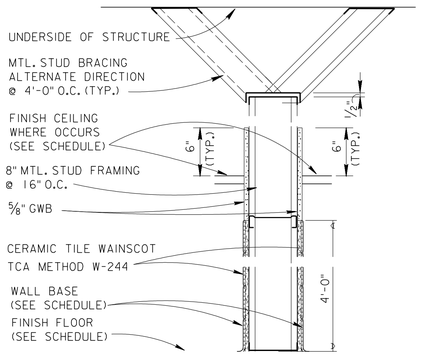

SCALE : 1 1/2"=1'-0"

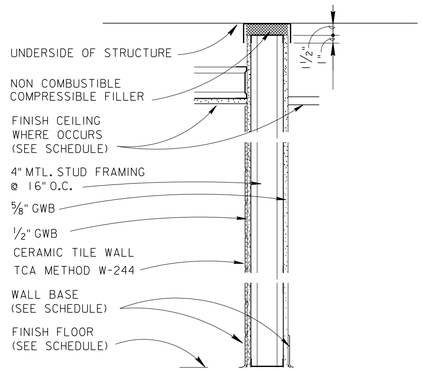

SCALE : 1 1/2"=1'-0"

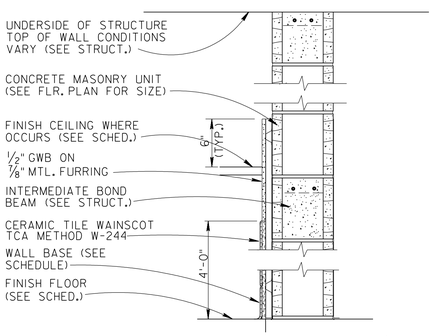

CONCRETE MASONRY UNIT 11

SCALE : 1 1/2"=1'-0"

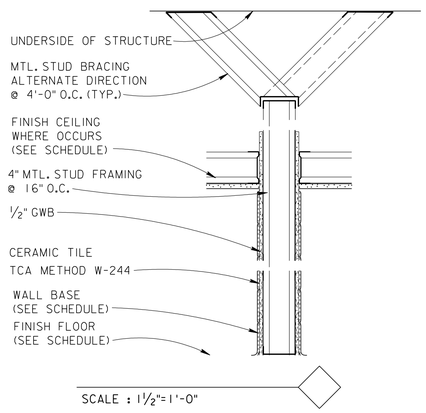

SCALE : 1 1/2"=1'-0"

(1) NOT USED

(2) MTL. STUD PARTITIONS SHALL ALLOW FOR STRUCTURAL DEFLECTION. PROVIDE 1/2" SLIP CONNECTION AT TOP RUNNER.

(3) SEE STRUCTURAL DWGS. FOR MASONRY WALL REINFORCEMENT REQUIREMENTS.

(4) SEE REFLECTED CEILING PLANS SHEETS FOR FIRE RATED WALL LOCATIONS.

(5) WALL TYPES ARE INDICATED ON THE FLOOR PLANS BY THE SYMBOL:

(6) MAXIMUM HEIGHT OF STUD FRAMING SHALL MEET THE REQUIREMENTS SPECIFIED IN SECTION: GYPSUM WALLBOARD 09250.

$$ – THINK VALUE ENGINEERING – $$

Revisions

Symbol	Descriptions	Date	Approved

U.S. ARMY ENGINEER DISTRICT
CORPS OF ENGINEERS
OMAHA, NEBRASKA

Designed by: M.D.M.
Drawn by: M.D.M.
Checked by: G.F.B.
Reviewed by:
Submitted by:
Chief: ARCH. Section

SITE NAME — SITE LOCATION

OMAHA DISTRICT DESIGN GUIDE

WALL TYPES

Plot Scale Ratio: X
Design File: oddga006.dgn
Date: JUNE 2002
Spec. No.: DACA 45
Drawing Code: X
Contract No.: DACA 45
Sheet reference number: **A5.03**

COMPUTER AIDED DESIGN & DRAFTING

D:\oddg\arch\oddga006.dgn 05/28/02 09:06:06 AM