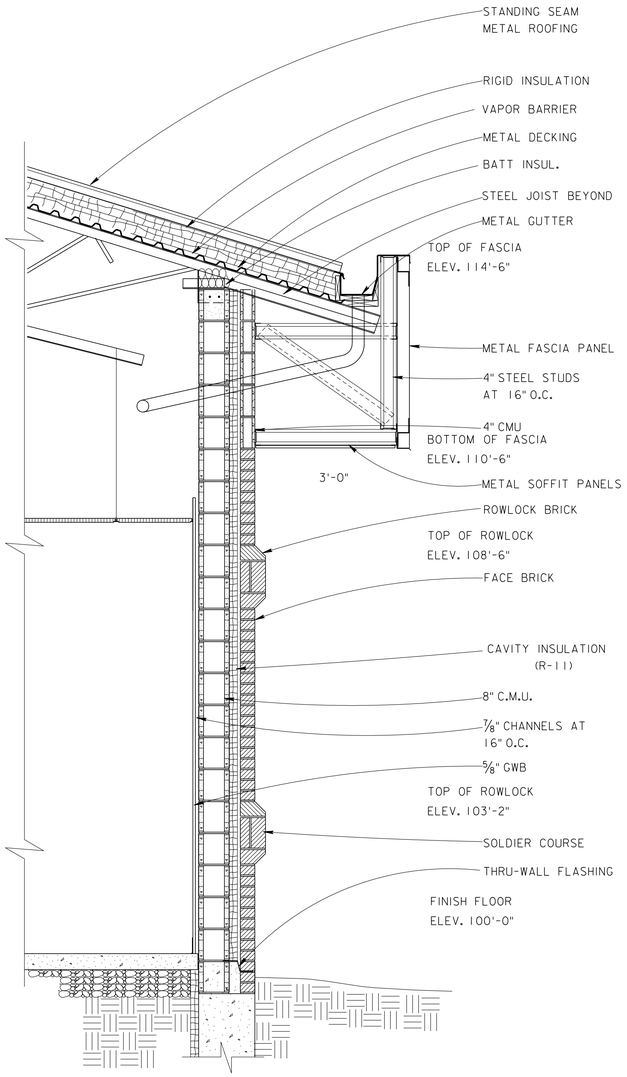

WALL SECTION 1 A1.01|A5.02
SCALE: 3/4 INCH = 1FOOT
12" 6" 0 1' 2'

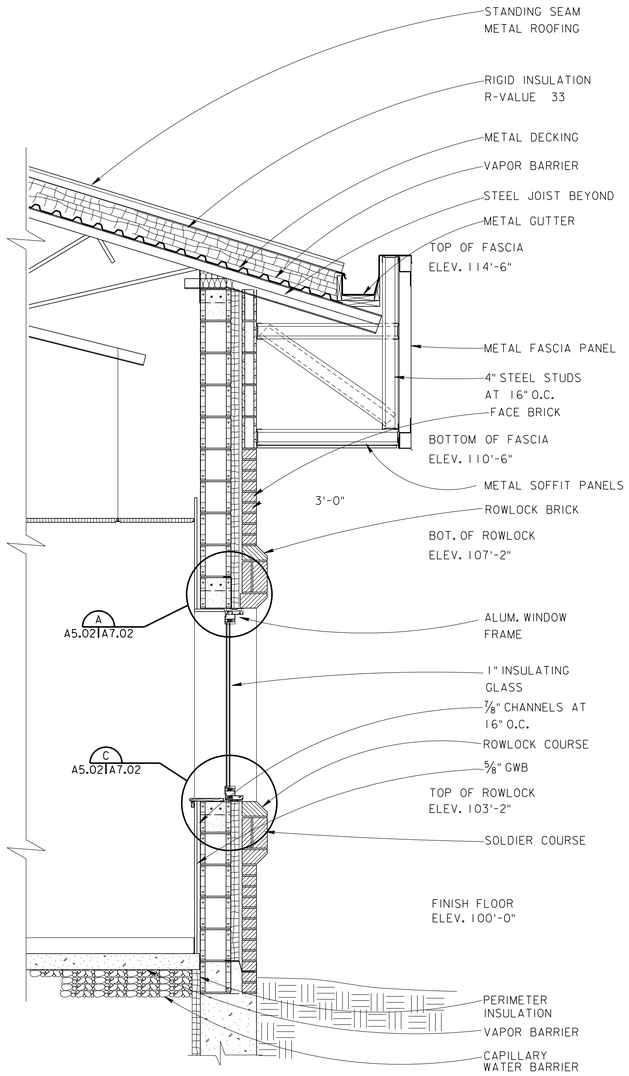

WALL SECTION 2 A1.01|A5.02
SCALE: 3/4 INCH = 1FOOT
12" 6" 0 1' 2'

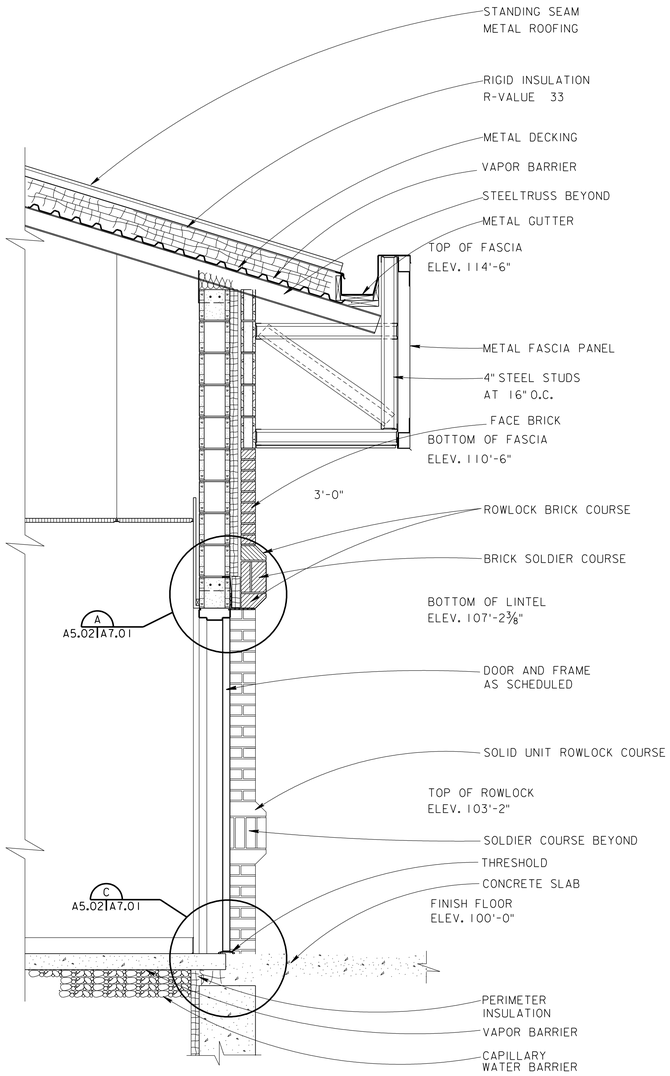

WALL SECTION 3 A1.01|A5.02 A5.01
SCALE: 3/4 INCH = 1FOOT
12" 6" 0 1' 2'

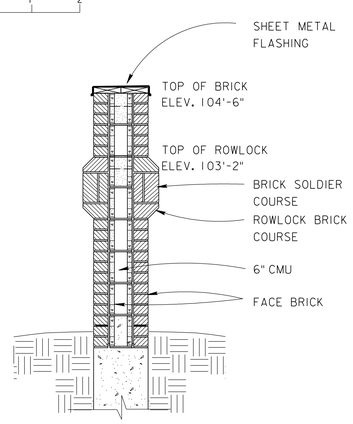

WALL SECTION 4 A1.01|A5.02
SCALE: 3/4 INCH = 1FOOT
12" 6" 0 1' 2'

$$ – THINK VALUE ENGINEERING – $$

Revisions

Symbol	Descriptions	Date	Approved

U.S. ARMY ENGINEER DISTRICT
CORPS OF ENGINEERS
OMAHA, NEBRASKA

Designed by: M.D.M.
Drawn by: M.D.M.
Checked by: G.F.B.
Reviewed by:
Submitted by:
Chief: ARCH. Section

SITE NAME — SITE LOCATION

OMAHA DISTRICT DESIGN GUIDE

WALL SECTIONS

Plot Scale Ratio: 1.333:1
Design File: oddga005.dgn
Date: JUNE 2002
Spec. No.: DACA 45
Contract No.: DACA 45
Drawing Code: X
Sheet reference number: **A5.02**

COMPUTER AIDED DESIGN & DRAFTING

D:\oddg\arch\oddga005.dgn 05/28/02 08:52:02 AM