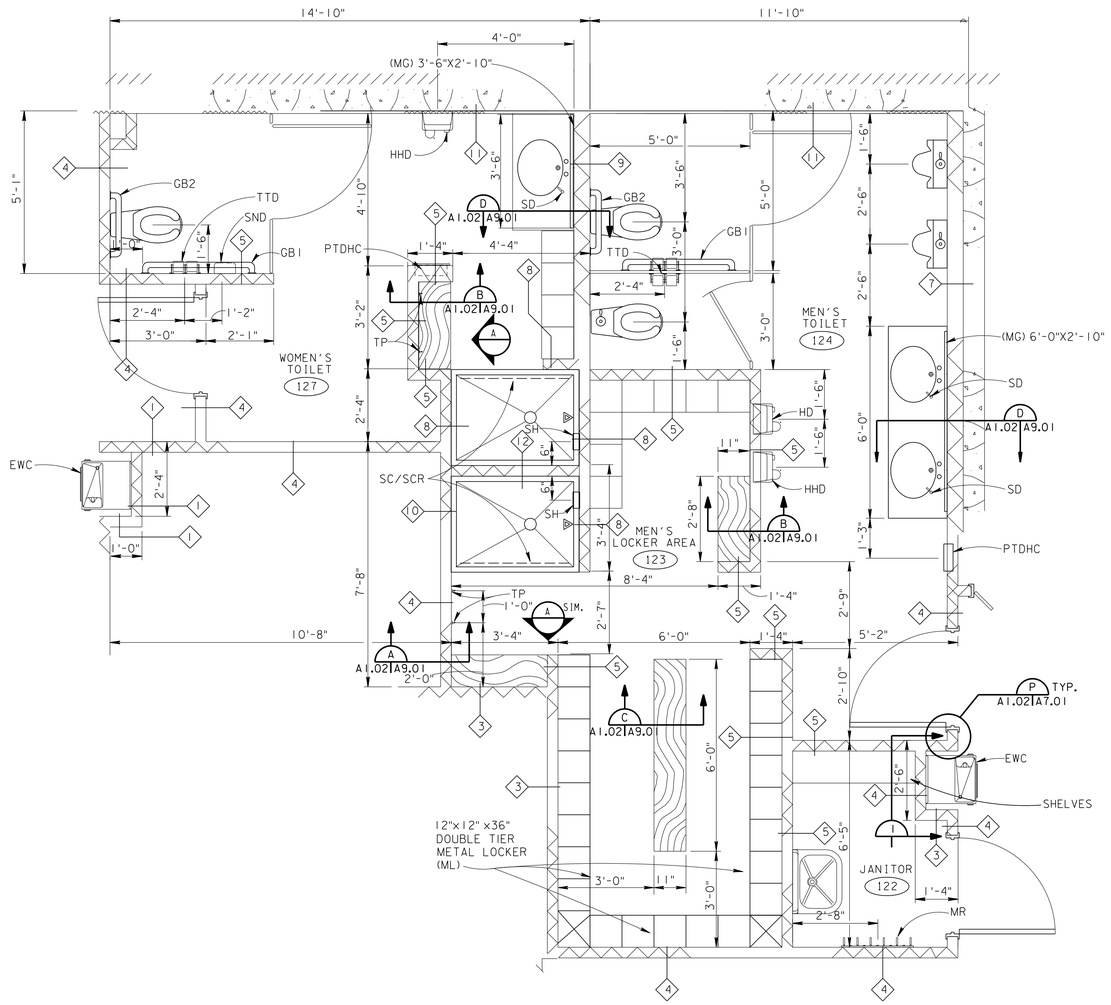

ENLARGED TOILET PLAN

SCALE: $\frac{1}{2}$ INCH = 1FOOT

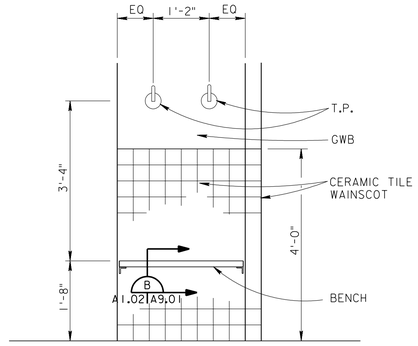

ELEVATION

SCALE: $\frac{3}{4}$ INCH = 1FOOT

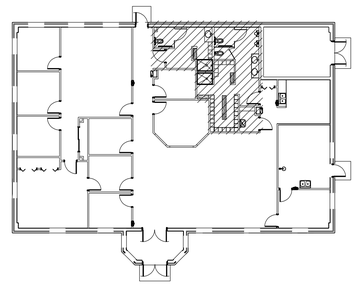

KEY PLAN

N.T.S.

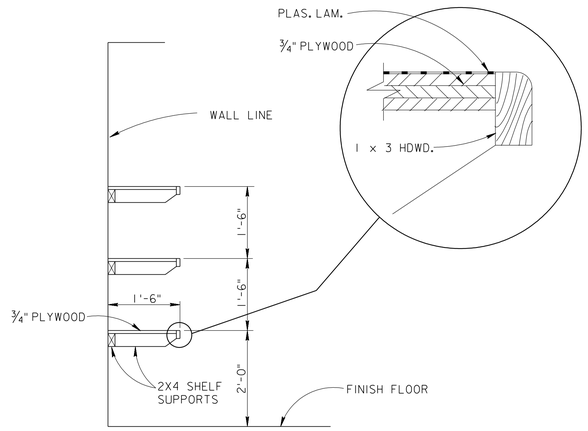

SECTION

SCALE: $\frac{3}{4}$ INCH = 1FOOT

NOTES:

1. ALL DOORS IN METAL STUD WALLS SHALL BE LOCATED 4 INCHES FROM ADJACENT PERPENDICULAR WALLS. SEE DETAIL P ON SHEET A7.01.
2. WALL TYPES INDICATED BY ◇— ARE LOCATED ON SHEET A5.03.
3. ALL METAL STUD WALL SHALL BE 4 INCHES UNLESS OTHERWISE INDICATED.
4. ALL CHANGES IN FLOOR MATERIAL SHALL OCCUR AT THE CENTER LINE OF THE DOOR IN THE CLOSED POSITION UNLESS OTHERWISE INDICATED.
5. NOT USED
6. REFER TO STRUCTURAL SHEETS FOR MASONRY REINFORCEMENT.
7. ALL CMU WALLS SHALL BE 8 INCHES NOMINAL UNLESS OTHERWISE INDICATED ON THE DRAWINGS.
8. DIMENSIONS ARE TO CENTERLINE OF COLUMNS, FACE OF STEEL SUDS, FACE OF CONCRETE, AND FACE OF MASONRY.
9. REFER TO THE REFLECTED CEILING PLAN FOR FIRE RATED PARTITIONS.

$$ – THINK VALUE ENGINEERING – $$

Revisions

Symbol	Descriptions	Date	Approved

U.S. ARMY ENGINEER DISTRICT
CORPS OF ENGINEERS
OMAHA, NEBRASKA

Designed by: M.D.M.
Drawn by: M.D.M.
Checked by: G.F.B.
Reviewed by:
Submitted by:
Chief: ARCH. Section

SITE NAME: OMAHA DISTRICT DESIGN GUIDE
SITE LOCATION

ENLARGED TOILET PLAN

Plot Scale Ratio: 2:1
Design File: oddga002.dgn
Date: JUNE 2002
Spec. No.: DACA 45
Contract No.: DACA 45
Drawing Code: X
Sheet reference number: **A1.02**

COMPUTER AIDED DESIGN & DRAFTING

d:\oddg\arch\oddga002.dgn 05/23/02 04:05:22 PM