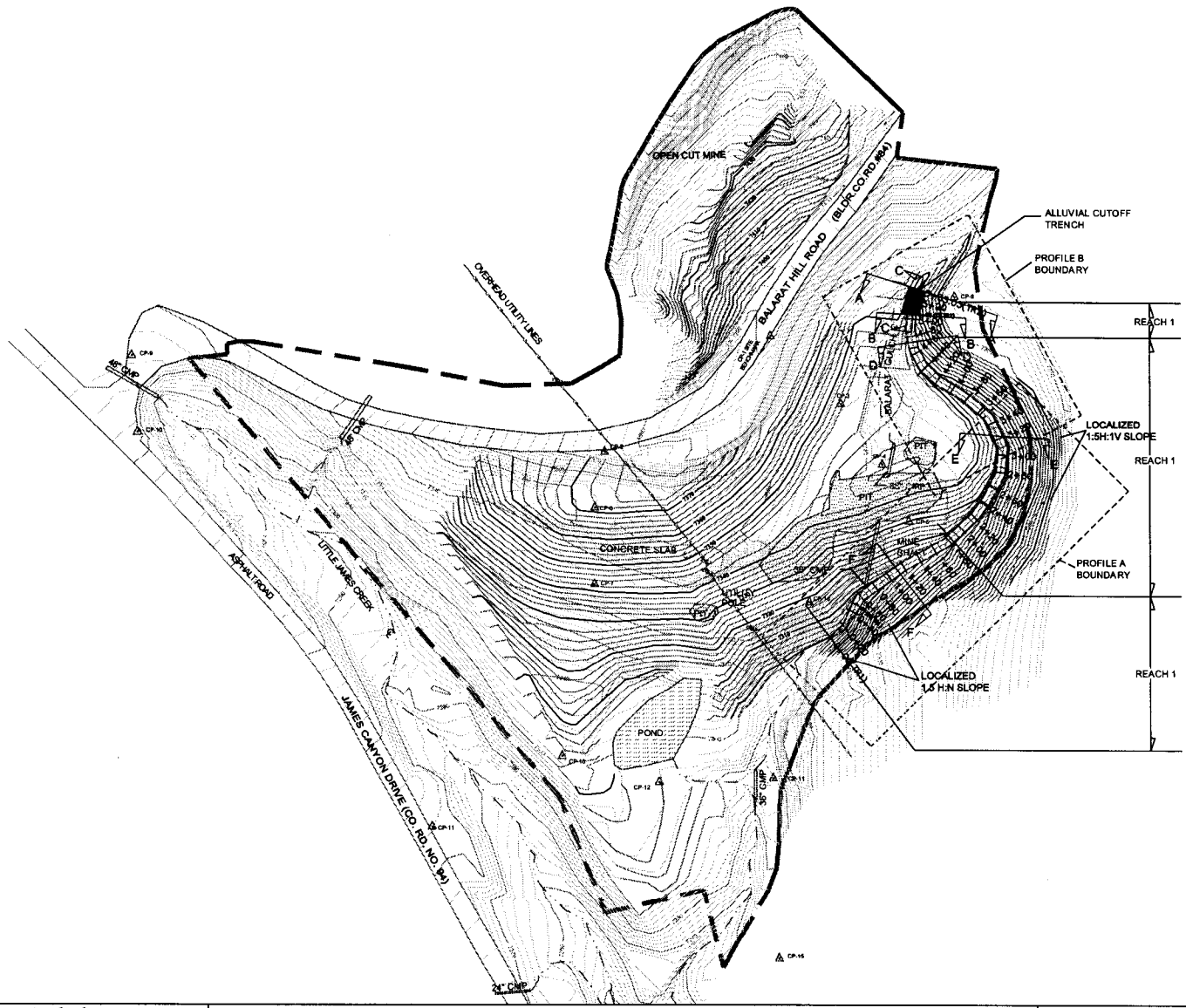

LEGEND

- VCUP PROJECT LIMITS (TO CHANGE BASED ON SURVEY)
- EXISTING CONTOURS
- FINAL CONTOURS
- PROFILE BOUNDARY

COLORADO LAW (SENATE BILL 93-155) REQUIRES PERSONS TO NOTIFY THE UTILITY NOTIFICATION CENTER

Fig. 1

Balarat Gulch Re-alignment at Burlington Mine

Honeywell International, Inc.

Corps File No. 200380091

Walsh
Environmental Scientists and Engineers, LLC

BURLINGTON MINE SITE- JAMESTOWN, CO

I:\PROJECTS\HONEYWELL.4786\fd.080.CDs\CD Layout\Layouts\BG+SG Overview+BG PP.dwg 5/03 JM

Scale: 1" = 60'

Date: May 15,2003	Drawn By: J. Marck/ J. Ash
Project No. 4786-080	Checked By: J. Cowart / J. Ash
Figure: BG1	Sheet 17 of 30

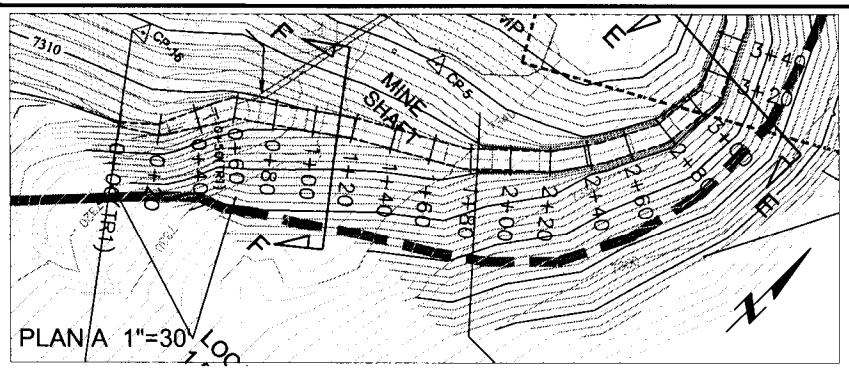

STEP-DROP REQUIREMENTS:

	ESTIMATED NO. DROPS	AVG. DROP HEIGHT	ACCEPTABLE DROP HEIGHT RANGE	AVG. DROP SPACING	ACCEPTABLE DROP SPACING RANGE
REACH 1:	12	12"	6" - 18"	15'	5' - 20'
REACH 2:	17	12"	6" - 18"	15'	5' - 20'
REACH 3:	10	12"	6" - 18"	10'	5' - 15'

SLOPE REQUIREMENTS:

	EFFECTIVE SLOPE	ACCEPTABLE SLOPE RANGE OVER 50' SECTIONS	AVG. SLOPE BETWEEN DROPS	ACCEPTABLE RANGE FOR SLOPE BETWEEN DROPS
REACH 1:	8.4%	7% - 9%	2.1%	2.0% - 2.5%
REACH 2:	8.4%	7% - 9%	2.1%	2.0% - 2.5%
REACH 3:	11.2%	11% - 11.7%	2.1%	2.0% - 2.5%

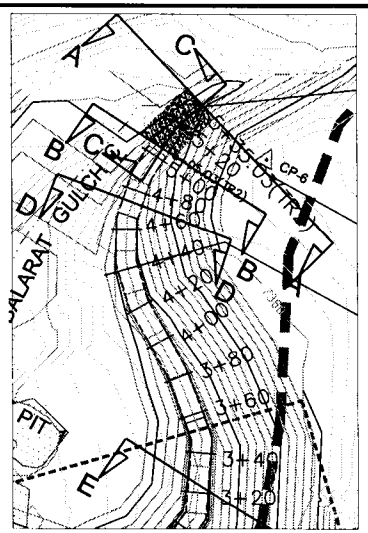

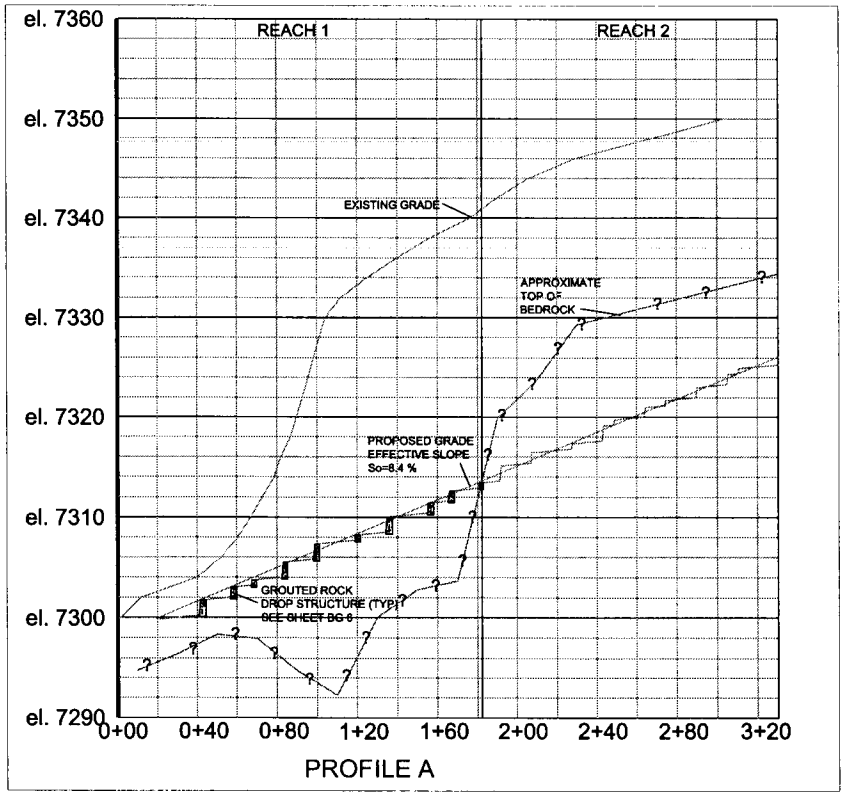

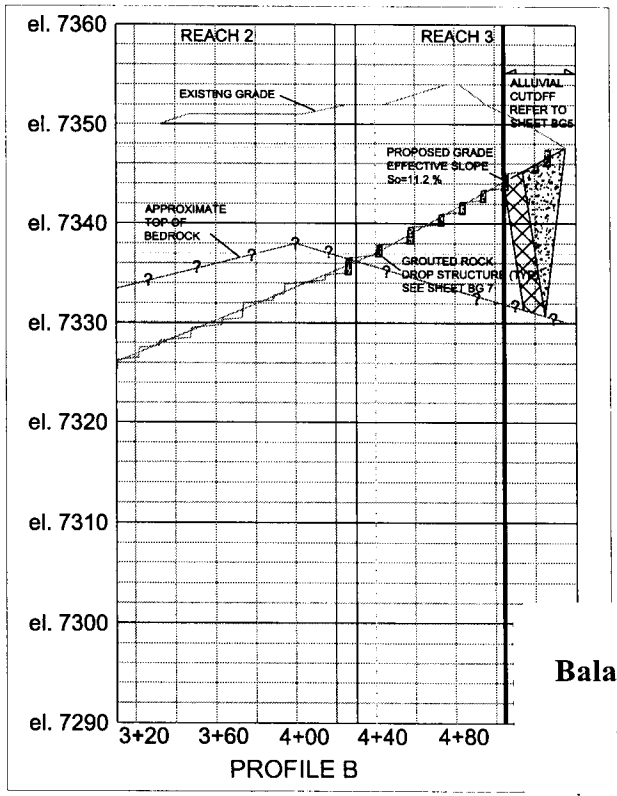

NOTES:
1. APPROXIMATED TOP OF BEDROCK LINE IS BASED ON SEISMIC REFRACTION SURVEY COMPLETED BY BLACKHAWK GEOSERVICES ON DECEMBER 2, 2002.

2. BALARAT GULCH DIVERSION CHANNEL IS DESIGNED TO CONVEY THE 100-YEAR+20 % DISCHARGE (264 CFS). LOCALIZED DAMAGE TO BED AND BANK PROTECTION FEATURES IN NON-BEDROCK REACHES MAY OCCUR DURING MAJOR STORM EVENTS (100-YEAR RETURN PERIOD OR LESS) AND MAY REQUIRE MAINTENANCE/REPAIR.

3. GRAVEL PLACEMENT OVER COMPLETED STEP-DROP STRUCTURES IS ACCEPTABLE TO FACILITATE SITE ACCESS AND TRANSPORTATION FOR PROJECT COMPLETION. GRAVELS SMALLER THAN 3" IN INTERMEDIATE DIMENSION DO NOT NEED TO BE REMOVED UPON PROJECT COMPLETION.

4. STEP-DROP STRUCTURES TO BE FIELD-LOCATED WITH ENGINEER'S APPROVAL

PROFILES @5X EXAG.
HORIZ. 1"=30'

COLORADO LAW (SENATE BILL 93-155) REQUIRES PERSONS TO NOTIFY THE UTILITY NOTIFICATION CENTER

Fig. 2

Balarat Gulch Re-alignment at Burlington Mine

Honeywell International, Inc.
Corps File No. 200380091

Walsh
Environmental Scientists and Engineers, LLC

BURLINGTON MINE SITE- JAMESTOWN, CO

I:\PROJECTS\HONEYWELL.4786\fd.080.CDs\CD Layout\Layouts\BG+SG Overview+BG PP.dwg 5/03 JM

Scale: 1" = 30'

Date: May 15,2003	Drawn By: J. Marck / J. Ash
Project No. 4786-080	Checked By: J. Cowart / J. Ash
Figure: BG2	Sheet 18 of 30

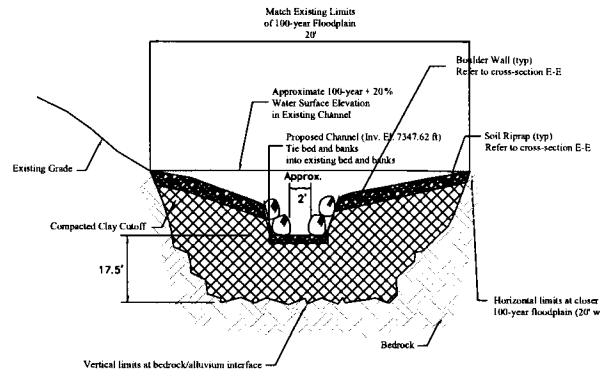

Cross-Section A-A
Alluvial Cutoff Trench
Upstream Section
Station 5+35.03

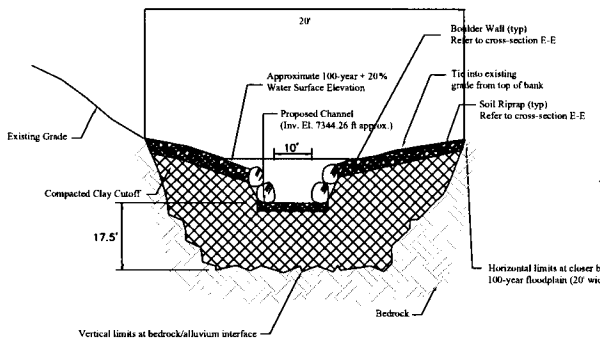

Cross-Section B-B
Alluvial Cutoff Trench
Downstream Section
Station 5+05.03

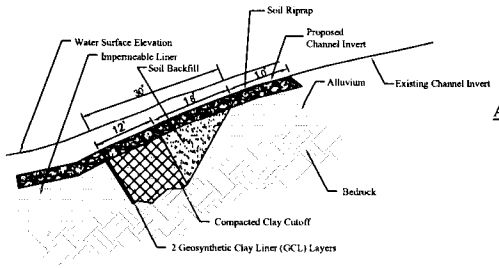

Cross-Section C-C
Alluvial Cutoff Trench

NOTES:

1. PRIOR TO GEOSYNTHETIC CLAY LINER (GCL) INSTALLATION AND CLAY

Fig. 3

Balarat Gulch Re-alignment at Burlington Mine

Honeywell International, Inc.
Corps File No. 200380091

Walsh
Environmental Scientists and Engineers, LLC

BURLINGTON MINE SITE - JAMESTOWN, CO

I:\ACAD\4786.HONEYWELL\FD.080.CDs\BG Details & Notes.dwg

Scale: 1" = 40'

Date: May 15, 2003	Drawn By: RW
Project No. 4786-080	Checked By: JEA
Figure: BG5	Sheet 21 of 30

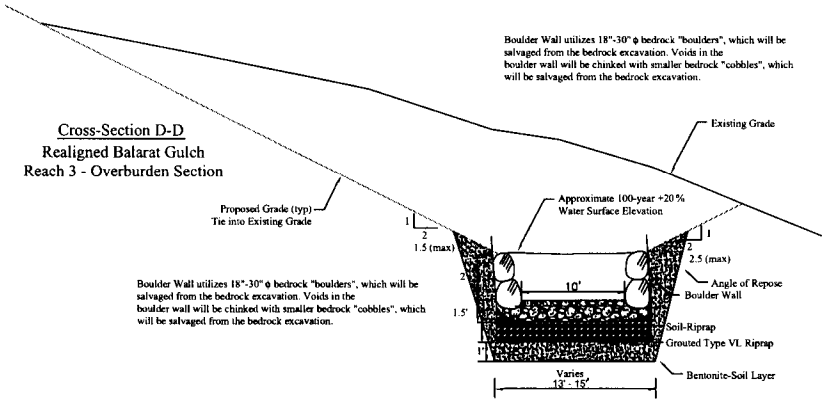

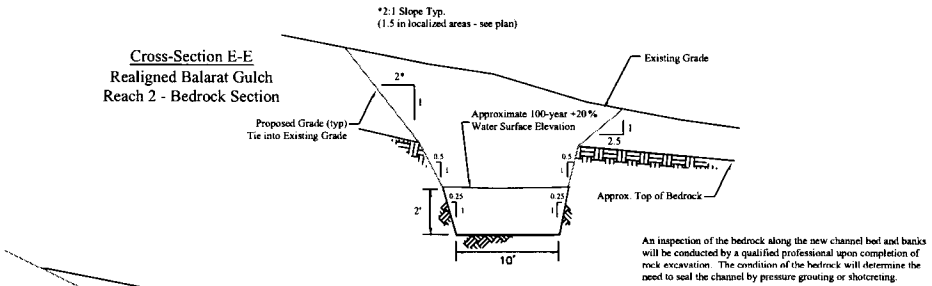

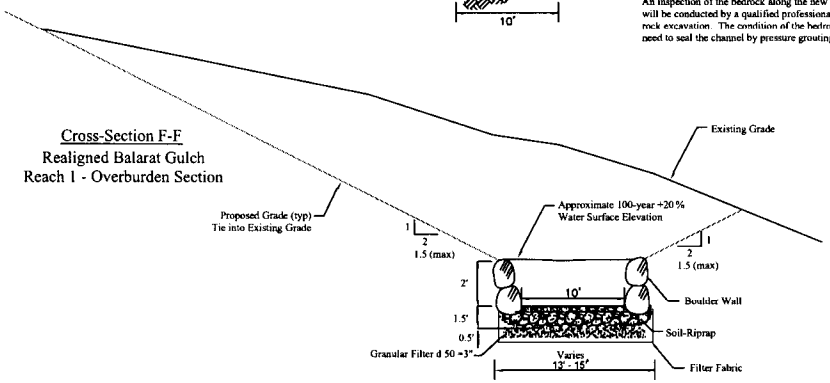

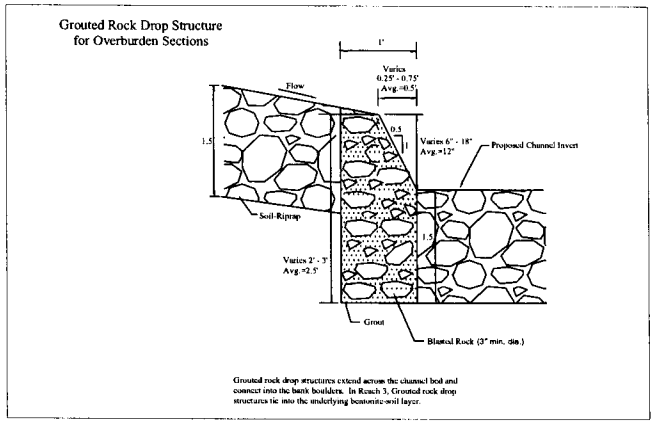

Fig. 4

Balarat Gulch Re-alignment at Burlington Mine

Honeywell International, Inc.
Corps File No. 200380091

Walsh Environmental Scientists and Engineers, LLC	BURLINGTON MINE SITE - JAMESTOWN, CO	Scale: 1" = 40'	Date: May 15, 2003 / Drawn By: RW
	I:\ACAD\4786.HONEYWELL\FD.080.CDs\BG Details & Notes.dwg		Project No. 4786-080 / Checked By: JEA
			Figure: BG6 / Sheet 22 of 30