METHOD 1 - BROKEN CONCRETE OR STONE RIPRAP FULL-SLOPE PROTECTION

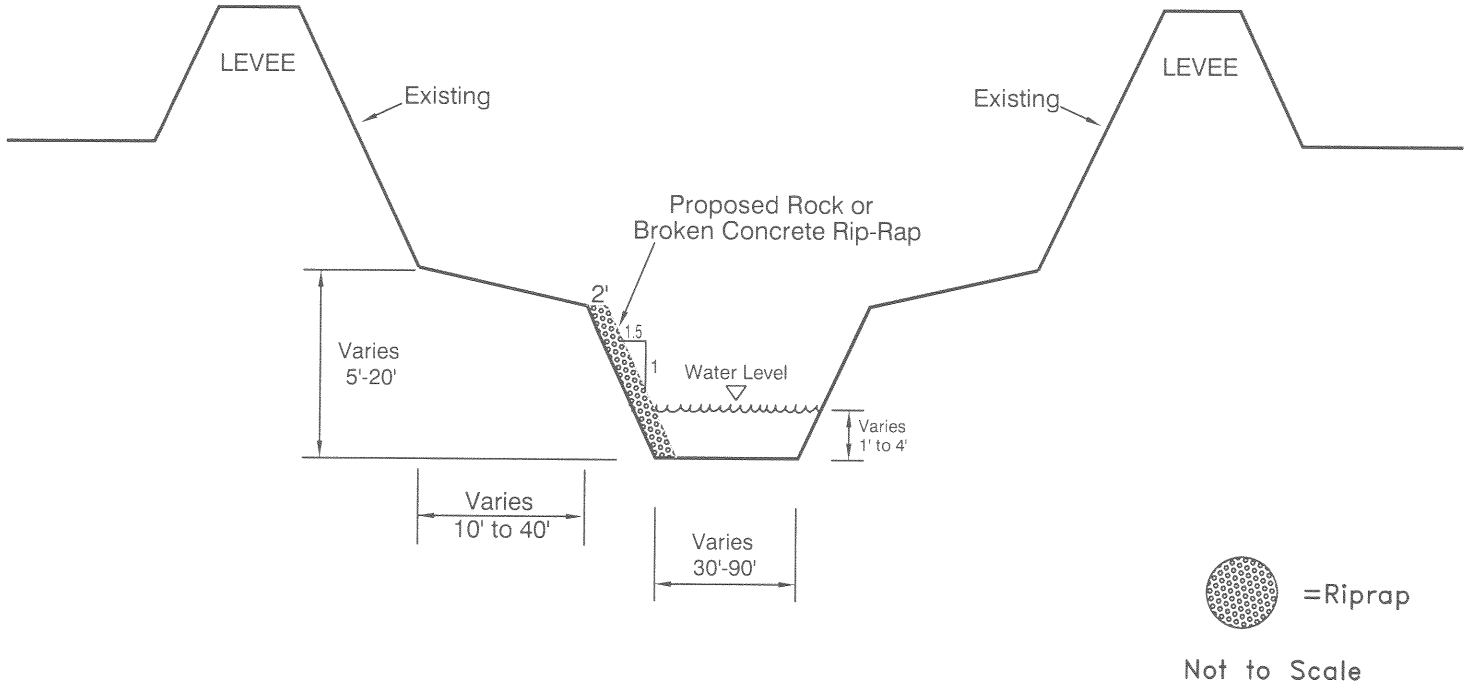

METHOD 2 - BROKEN CONCRETE OR STONE RIPRAP HALF-SLOPE PROTECTION

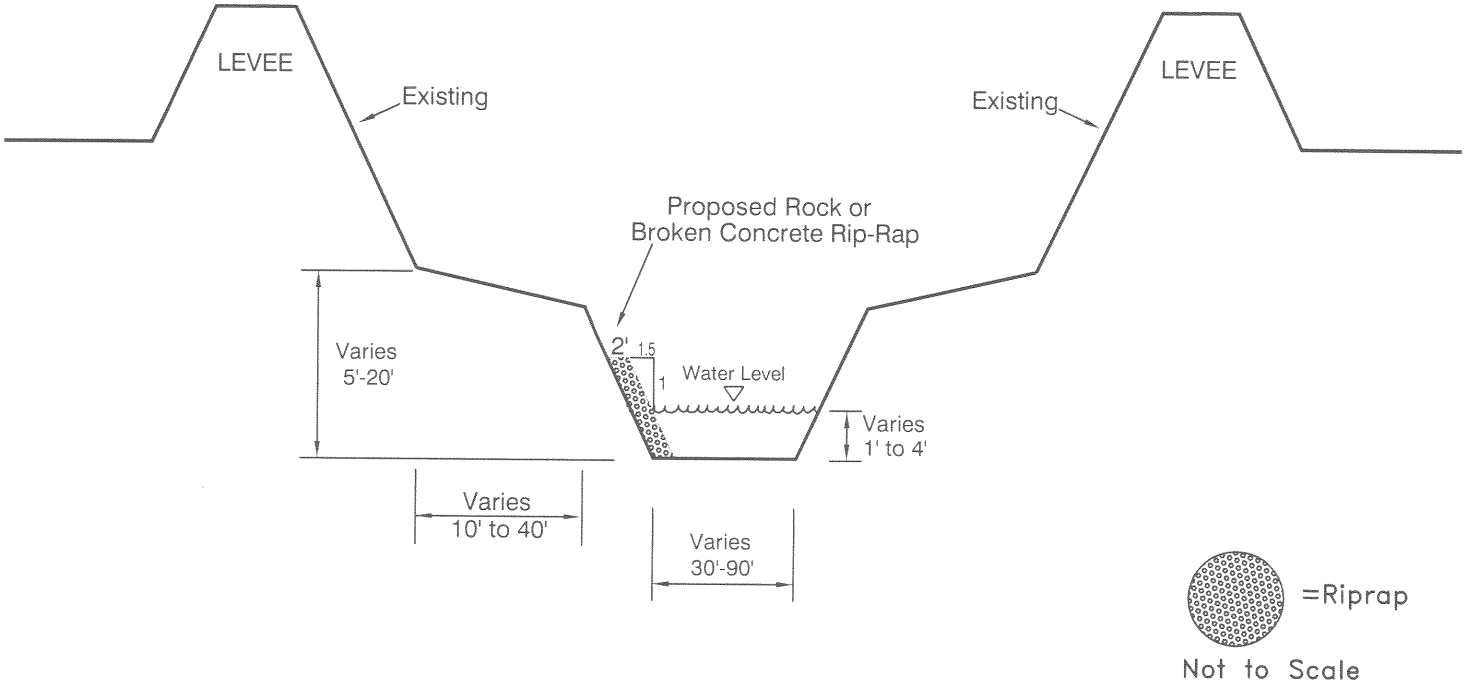

METHOD 3 - BROKEN CONCRETE OR STONE RIPRAP FULL-SLOPE PROTECTION WITH SOIL MATERIAL BACKFILL

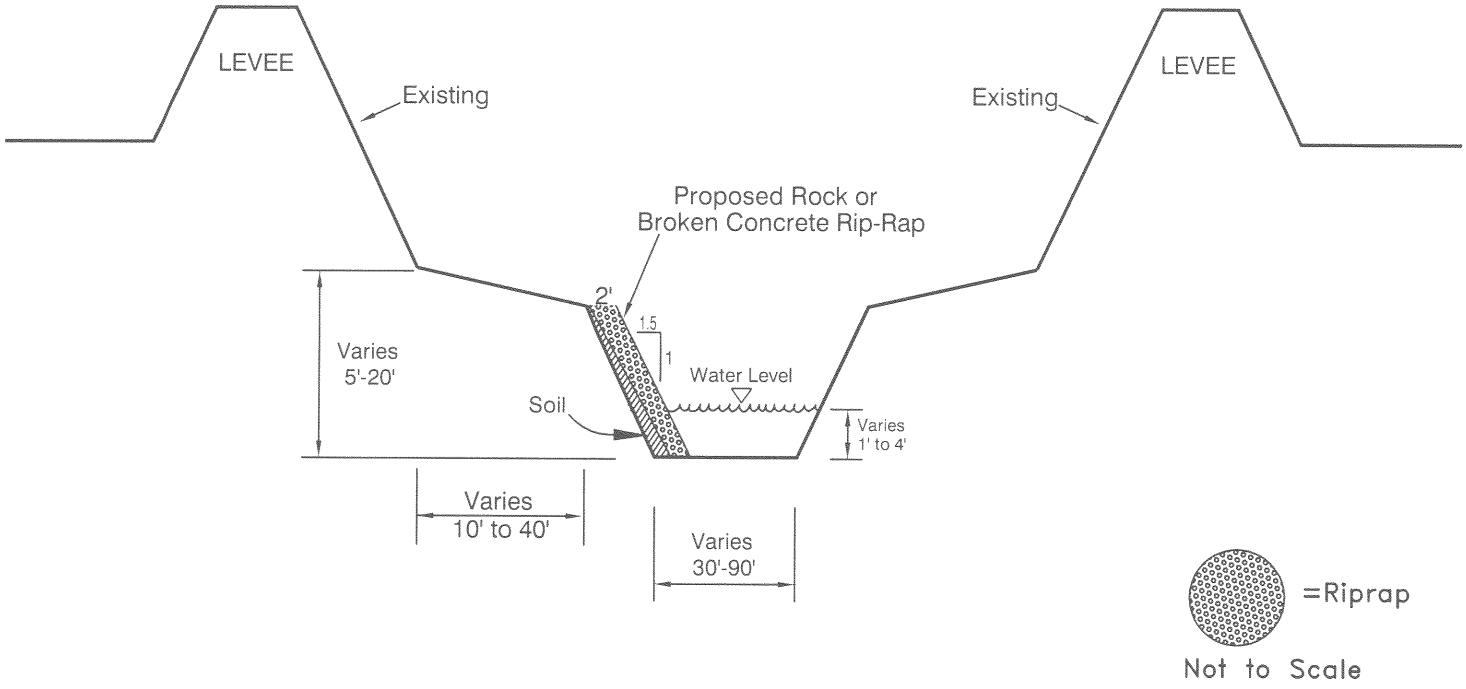

METHOD 4 - BROKEN CONCRETE OR STONE RIPRAP HALF-SLOPE PROTECTION WITH SOIL MATERIAL BACKFILL

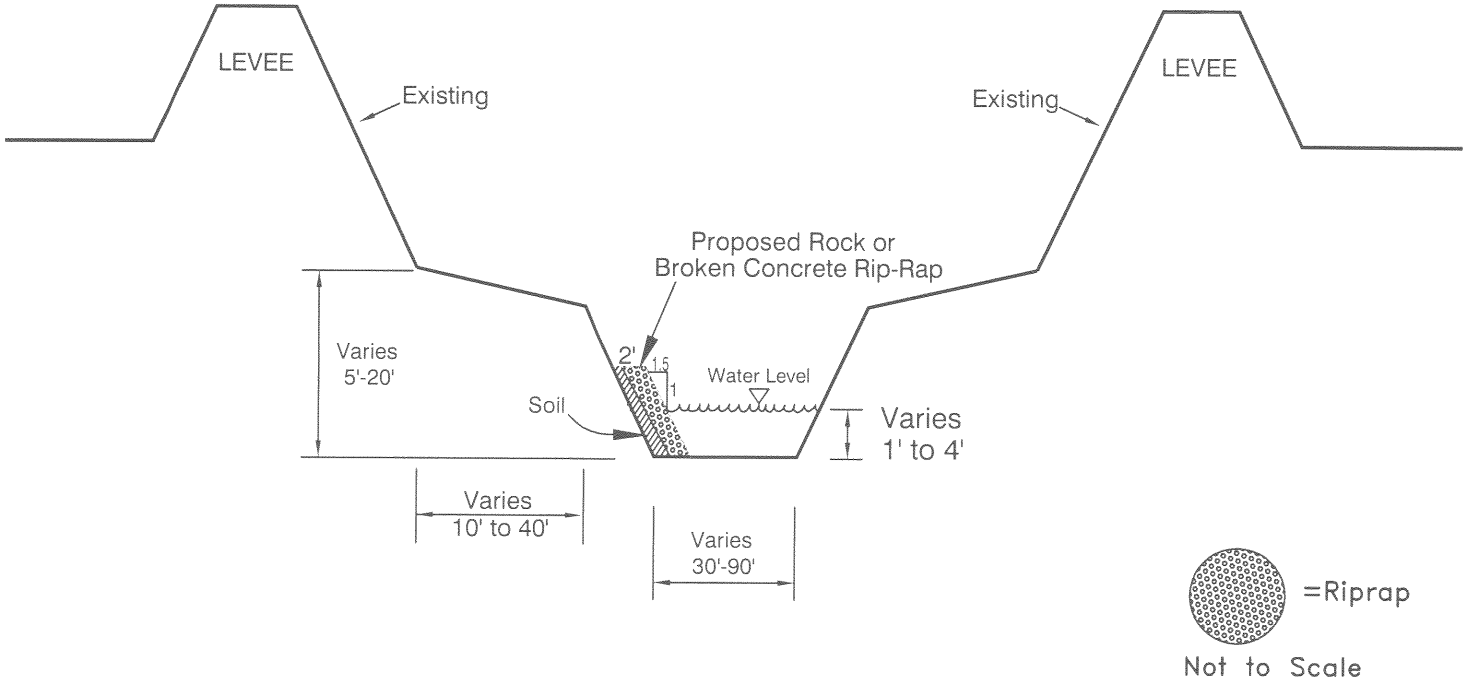

METHOD 5 - GABION REVETMENT SLOPE PROTECTION WITH SOIL MATERIAL BACKFILL

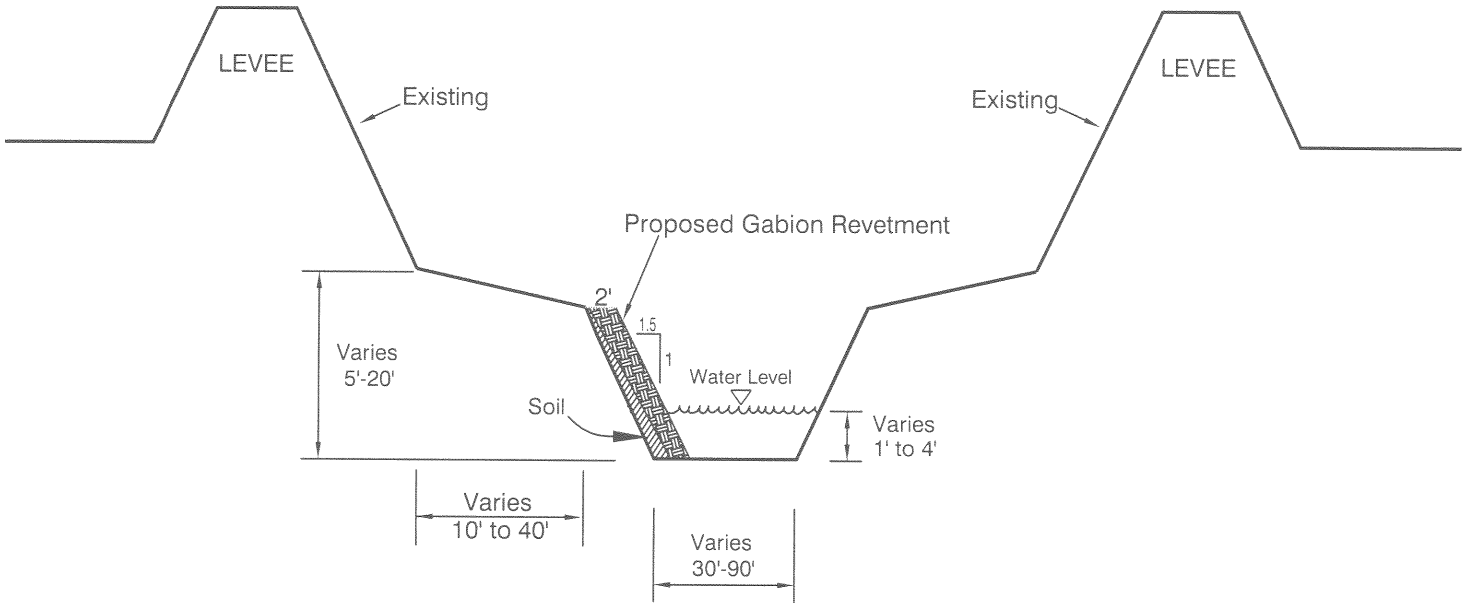

Not to Scale

METHOD 6 - GROUT FILLED FABRIC

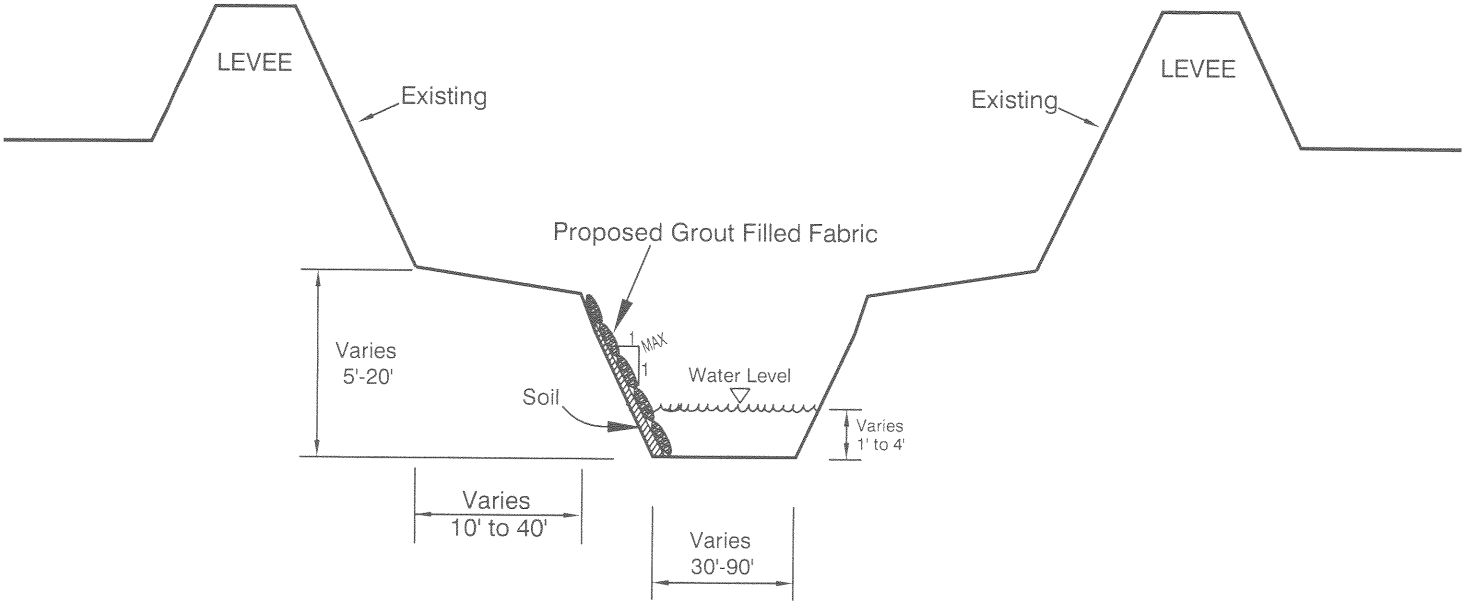

Not to Scale

METHOD 7 - PRE-CAST CONCRETE BLOCKS WITH SOIL MATERIAL BACKFILL

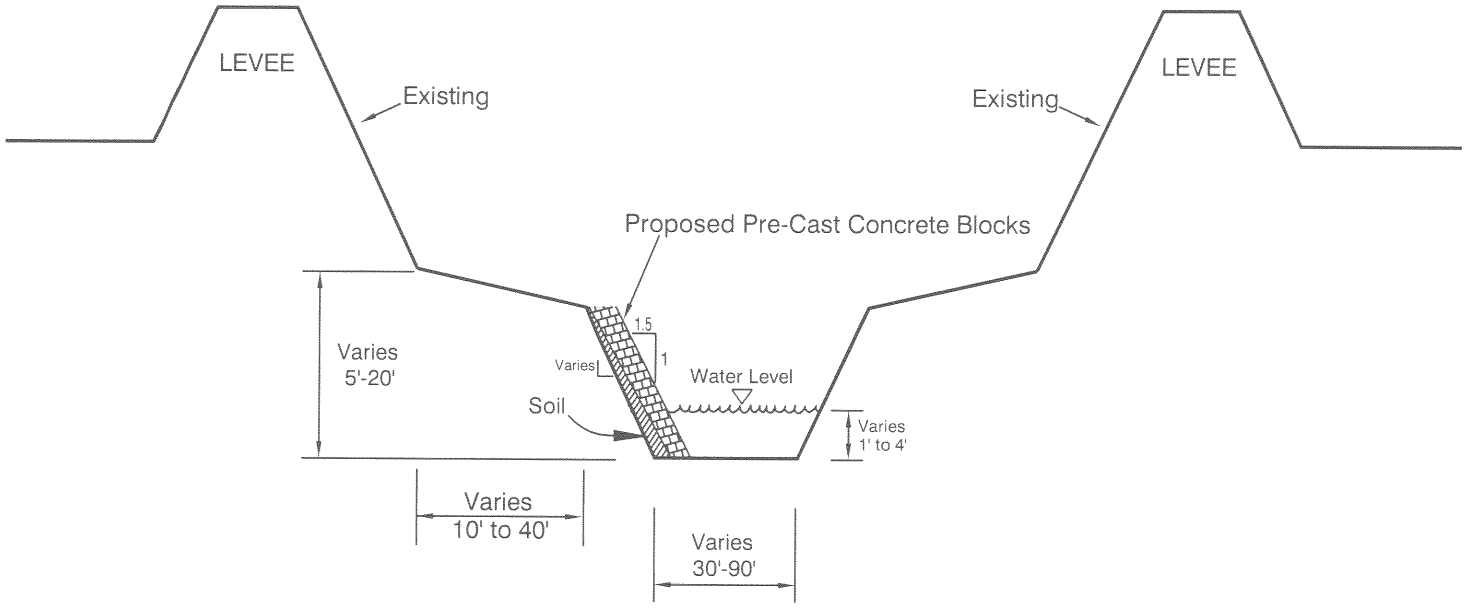

Not to Scale

METHOD 8 - BROKEN CONCRETE or STONE RIPRAP GRADE DROP (Rock Sill)

CROSS SECTION

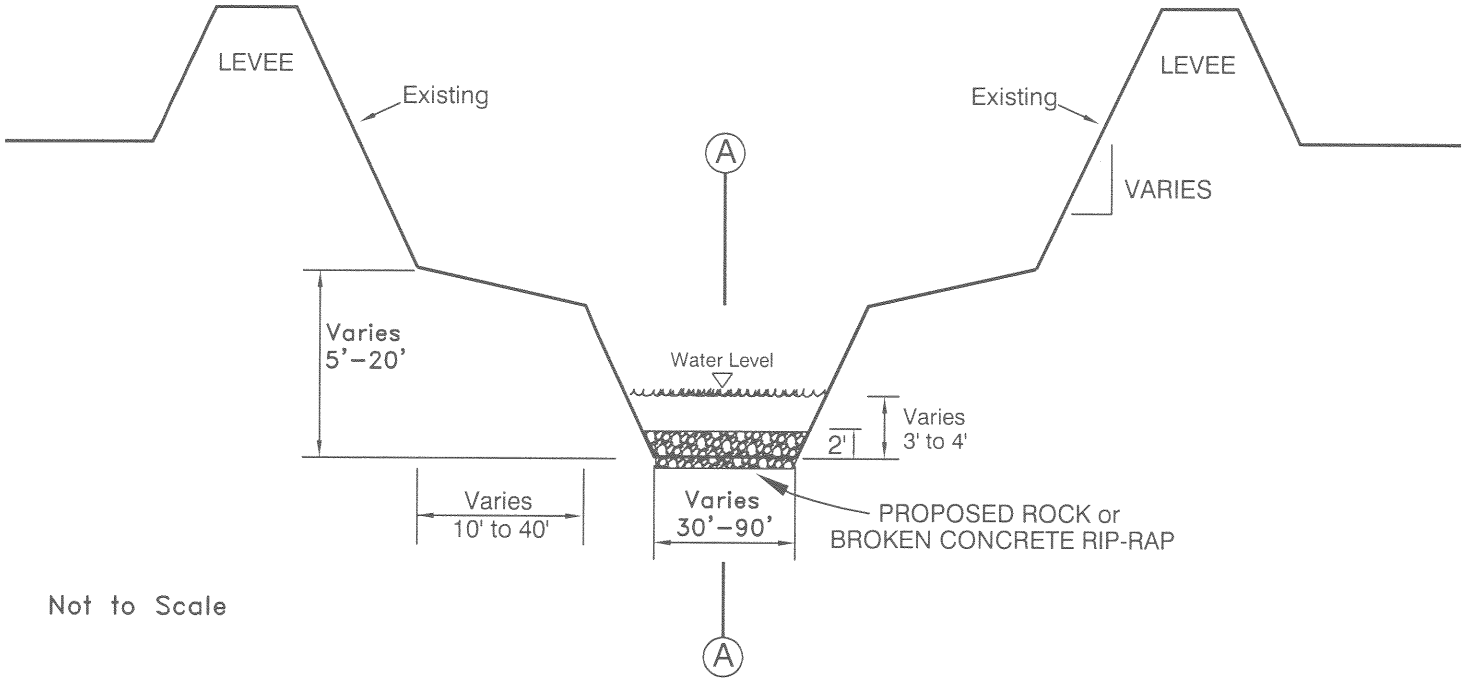

SIDE VIEW OF GRADE DROP

Section A-A

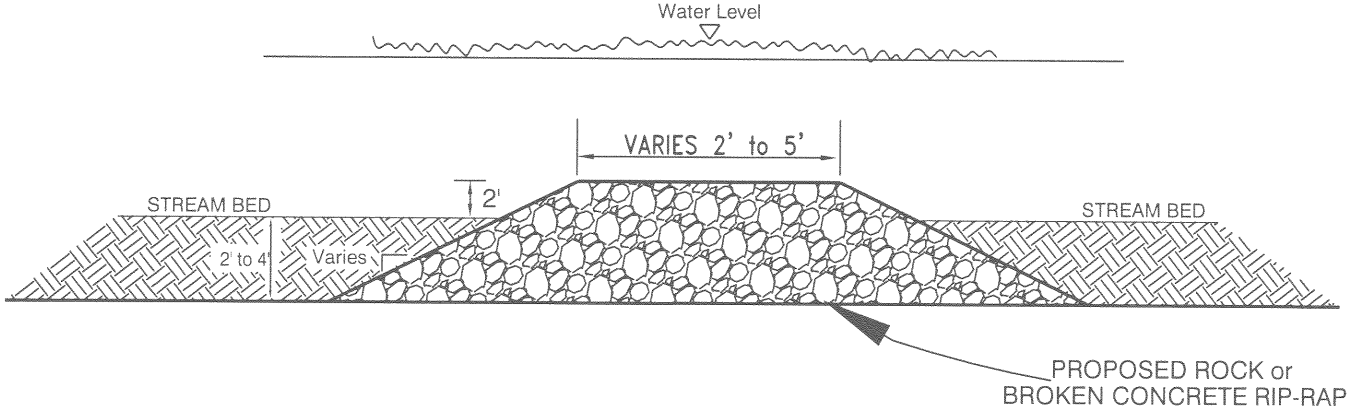

METHOD 9 - ROCK CRIB GRADE DROP

CROSS SECTION (along structure)

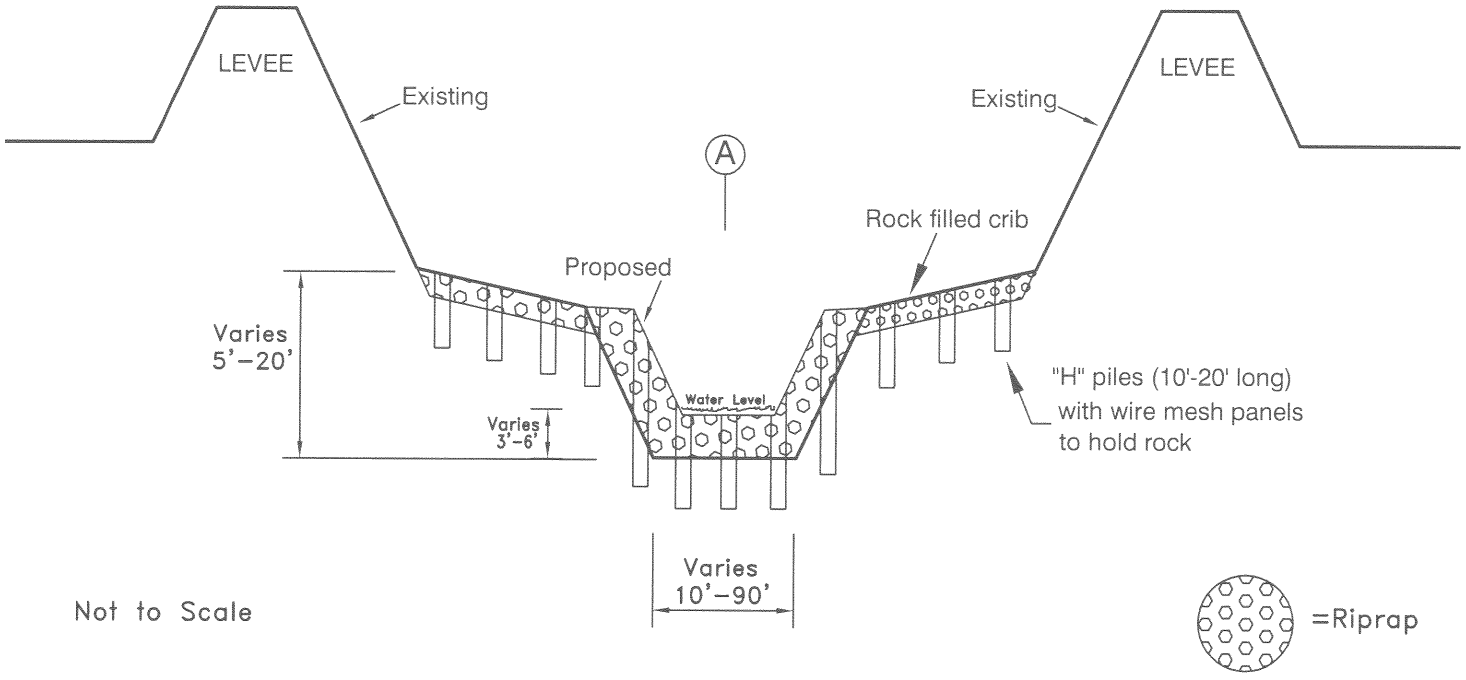

LONGITUDINAL SECTION

Section A

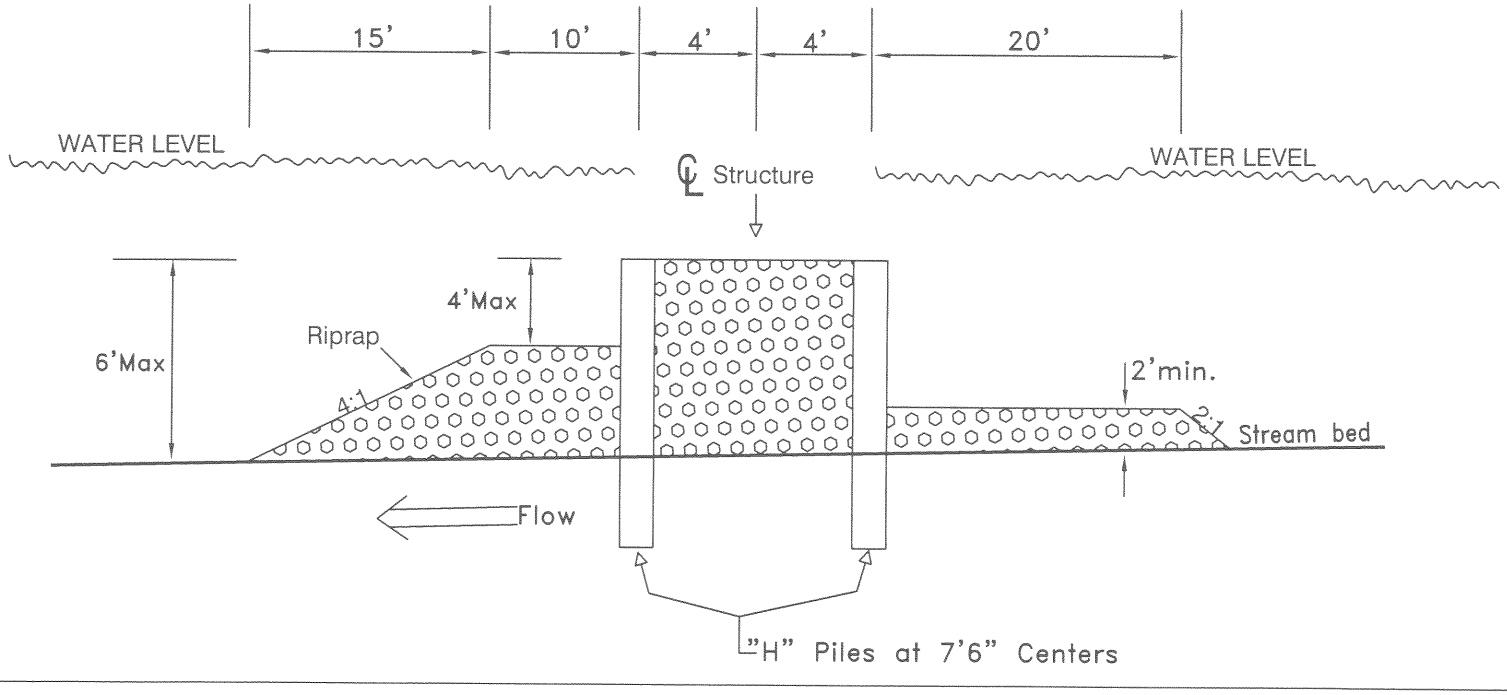

METHOD 10 - SHEET PILE GRADE DROP

CROSS SECTION (along structure)

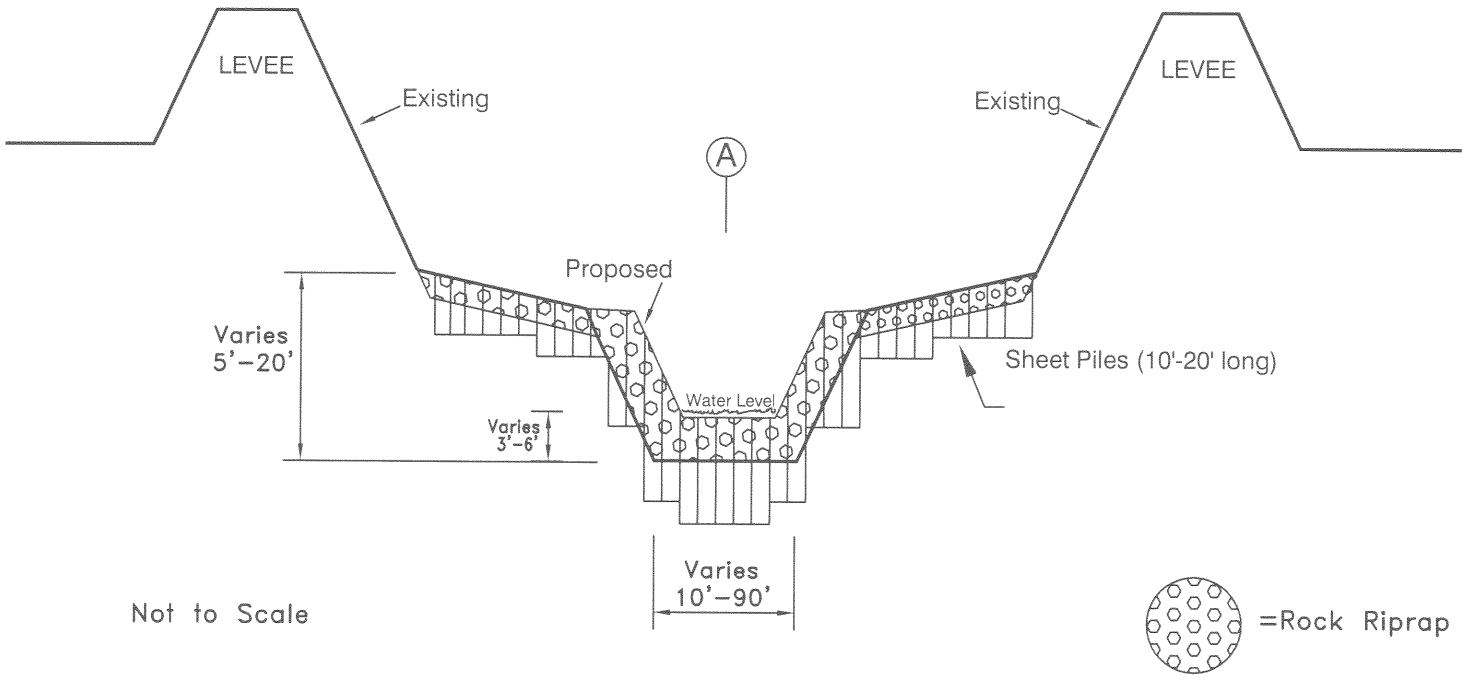

SECTION A
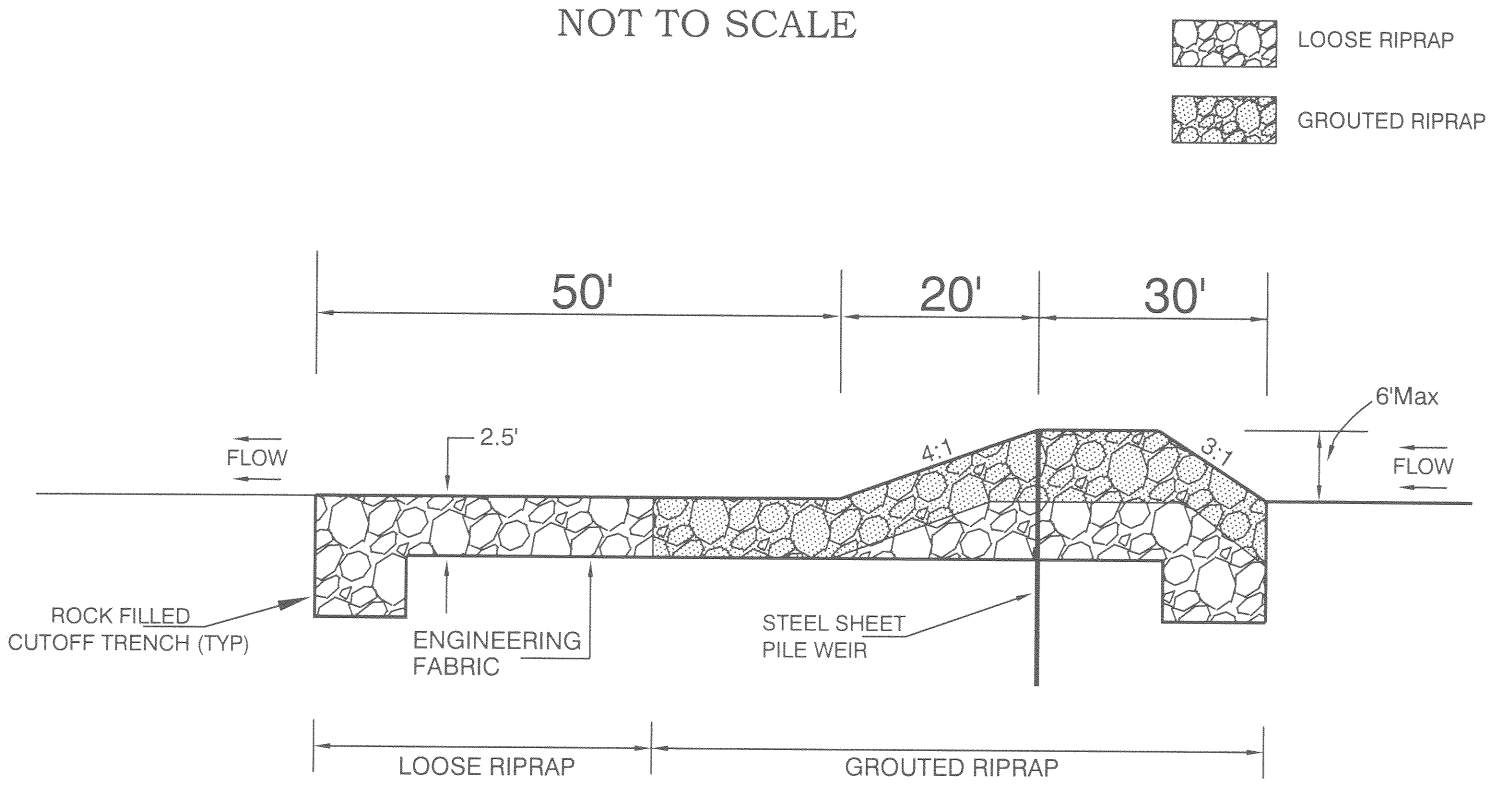
NOT TO SCALE