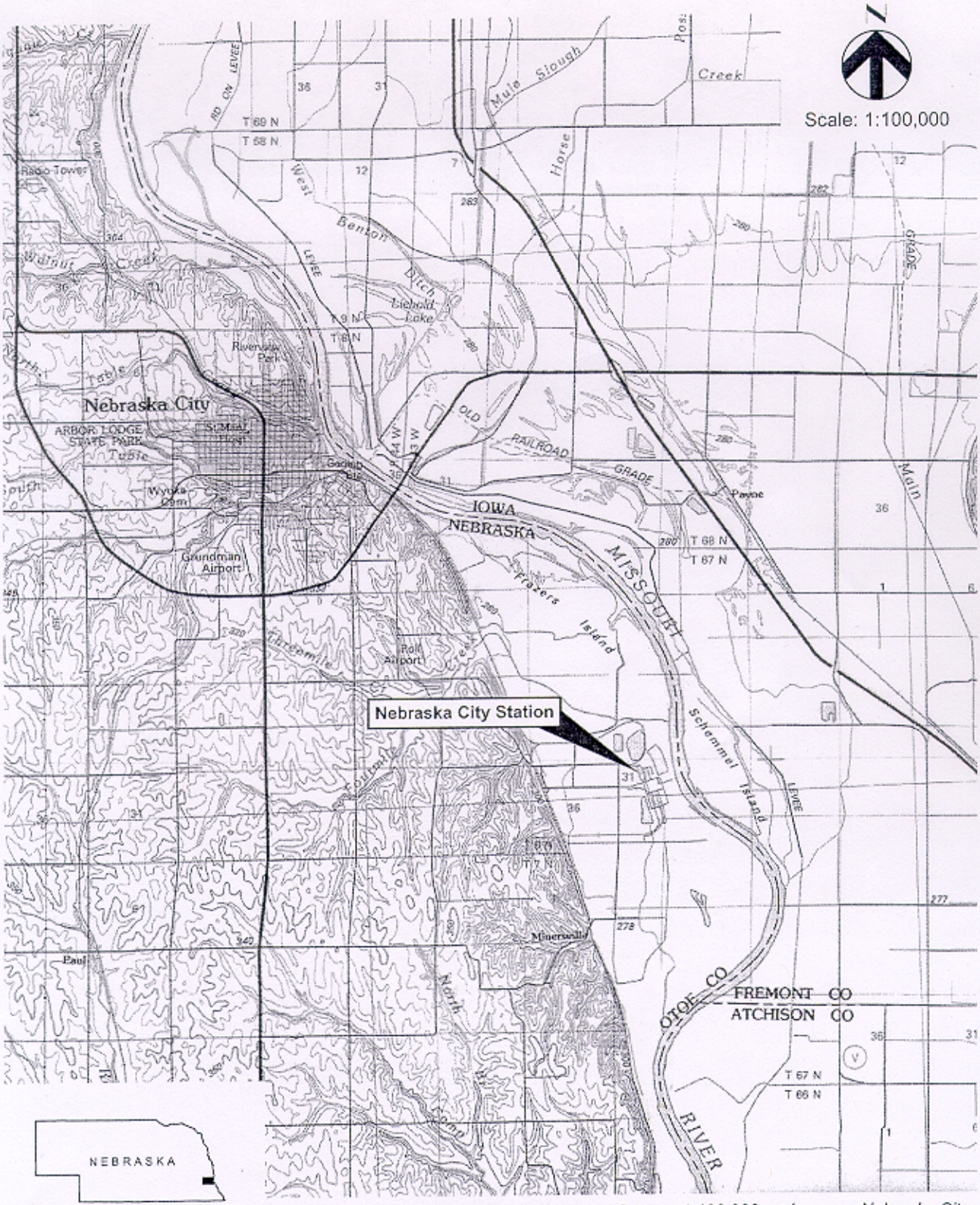

Source: United States Geological Survey; 1:100,000 scale maps; Nebraska City, Nebraska; 1993; Lincoln, Nebraska; 1988

HDR

HDR Engineering, Inc.

Location Map

OPPD Omaha Public Power District

Nebraska City Station
Site Drainage Plan

Date
June 2004

Figure
1

OPPD0001.cdr
X:/GB/Figures/OPPD/Nebraska City/Site Drainage Plan/Figures; 00000-000-134-00
2-26-04

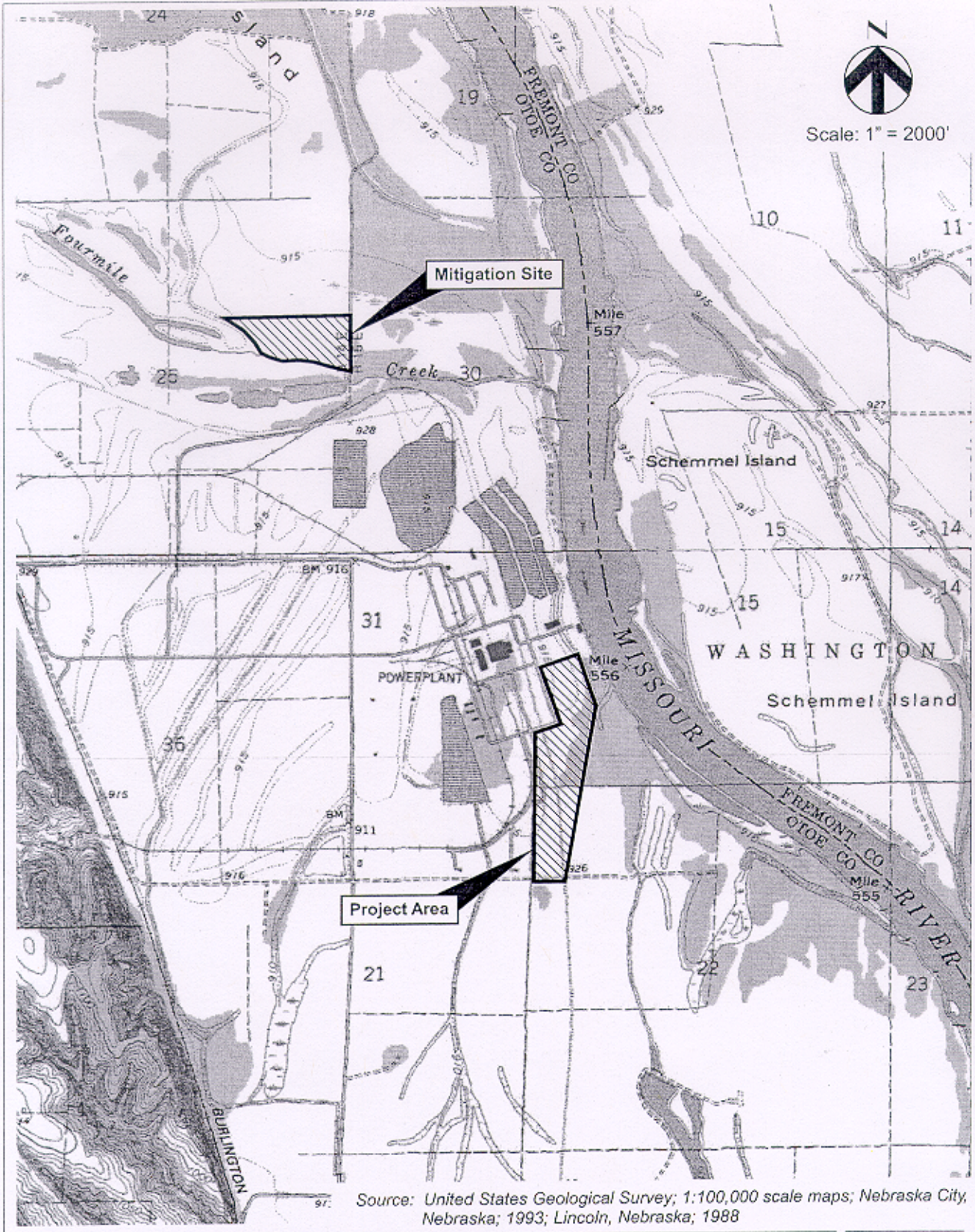

Source: United States Geological Survey; 1:100,000 scale maps; Nebraska City, Nebraska; 1993; Lincoln, Nebraska; 1988

HDR

HDR Engineering, Inc.

Mitigation Site Location

OPPD Omaha Public Power District

Nebraska City Station
Wetland Mitigation Concept

Date
June 2004

Figure
2

OPPD0002.cdr
X:/GB/Figures/OPPD/Nebraska City/Wetland Mitigation Concept/Figures; 00000-000-134-00
2-28-04

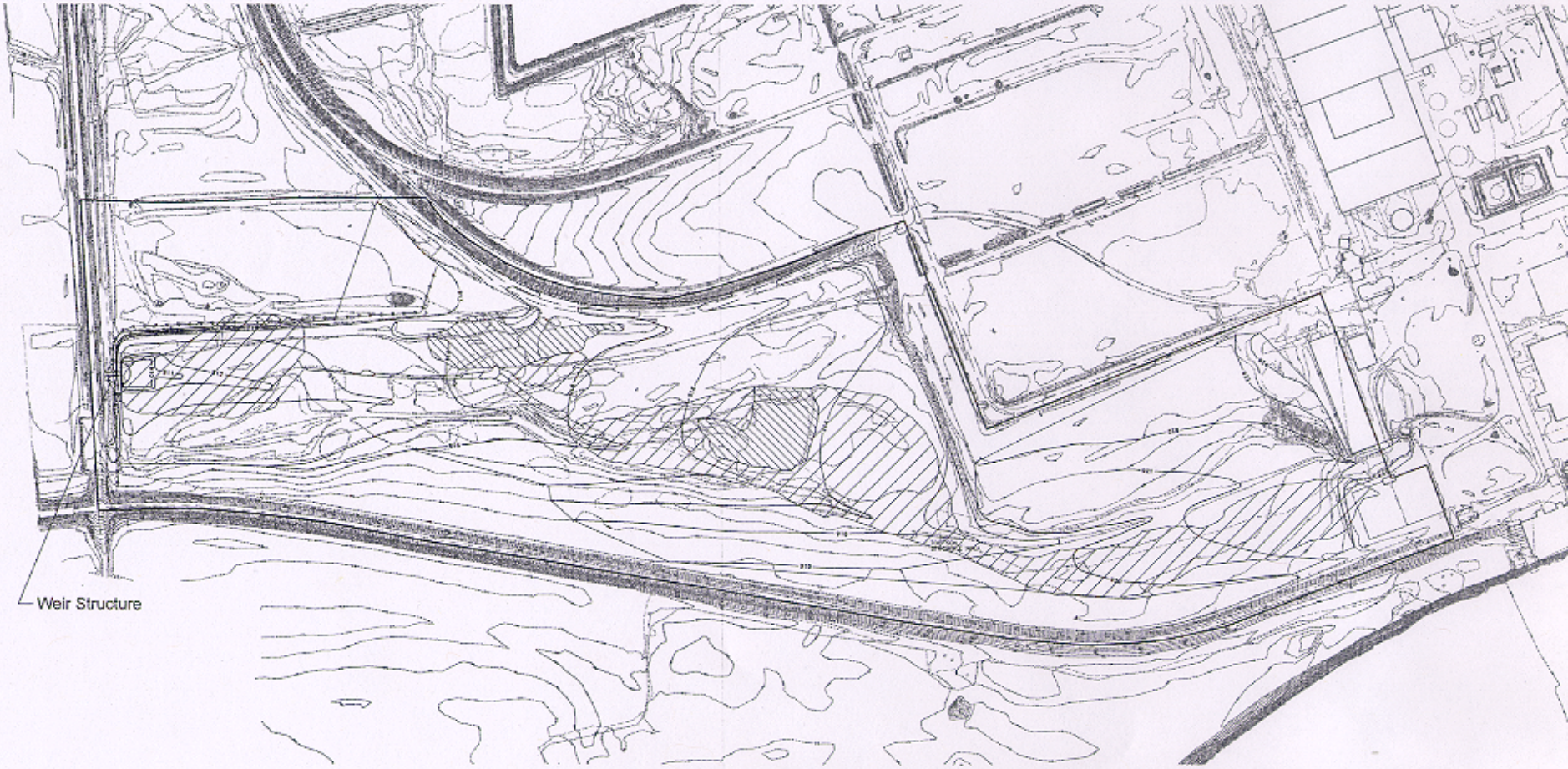

Source: Omaha Public Power District (July 2003); HDR Engineering,

Legend

Project Area

Wetland Areas

PEM

PFO

HDR

HDR Engineering, Inc.

Site Drainage Plan

OPPD Omaha Public Power District

Nebraska City Station
Site Drainage Plan

Date

June 200

Figure

3

06/04/2004 10:51:16 AM meriksen

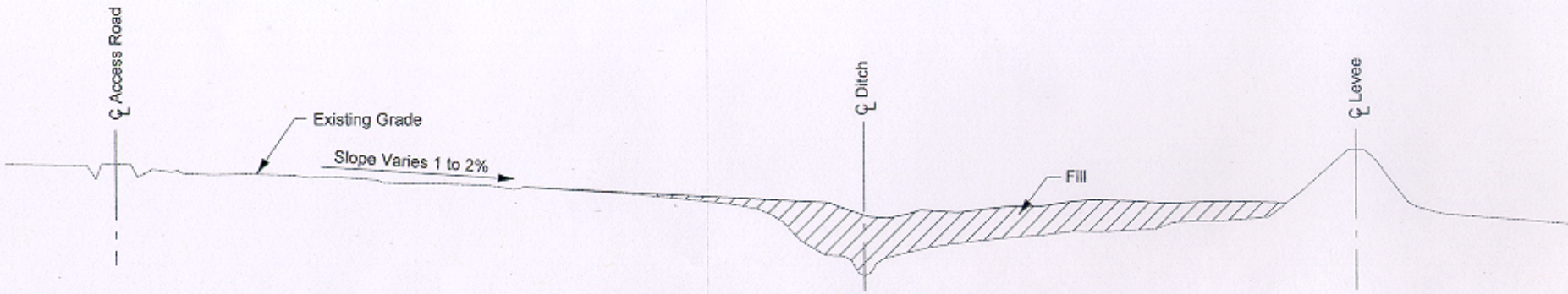

Typical Ditch Cross Section

No Scale (Vertical Scale 10 Times Horizontal Scale)

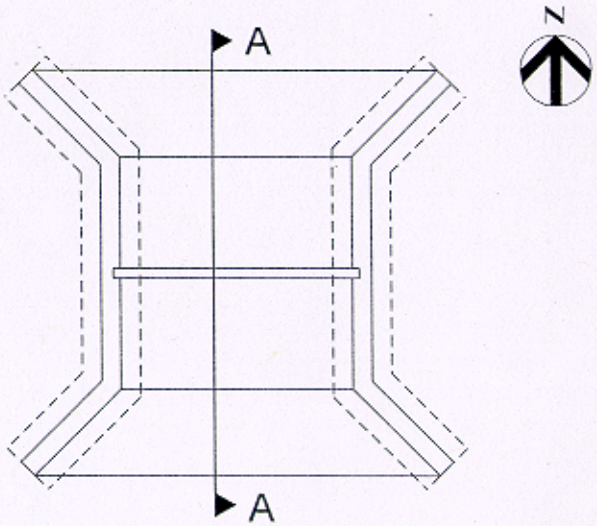

Weir Structure Plan

No Scale

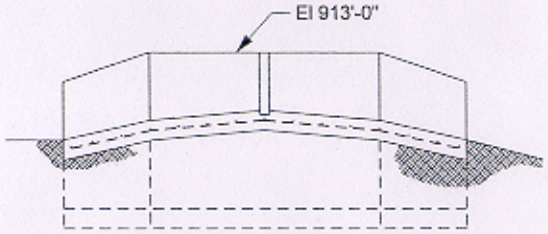

Section A-A

No Scale

Source: Omaha Public Power District (July 2003); HDR Engineering,

HDR

HDR Engineering, Inc.

Typical Ditch Section and
Weir Plan and Section

OPPD Omaha Public Power District

Nebraska City Station
Site Drainage Plan

Date
June 200

Figure
4